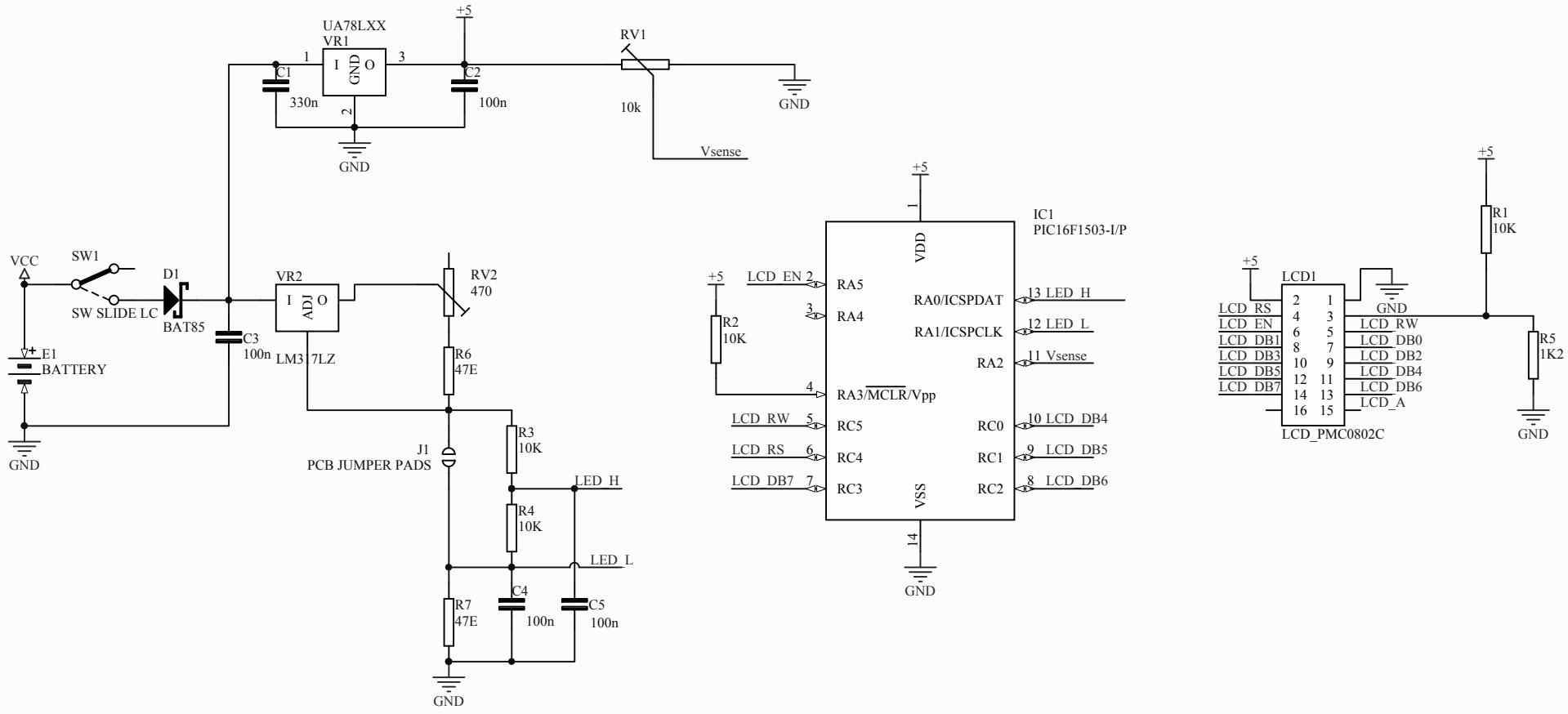

CE symbol Velleman Projects WEEE symbol

Title		
Size A4	Number	Revision
Date: 30/11/2017		Sheet of
File: C:\Users\..\MK198_1.SchDoc		Drawn By: