HAA2866N

3 OUTPUT RELAY DIGITAL ACCESS CONTROL KEYPAD

USER MANUAL

4

TABLE OF CONTENTS

INTRODUCTION 4
FEATURES 4
OPTIONAL DEVICES FOR SYSTEM EXPANSION 5
SPECIFICATIONS 6
INSTALLATION 7
Precautions 7
CONNECTION TERMINALS 8-10
OTHER FACILITIES 11
On-Board LED Indicators 11
Pacifier Tone & The LED Signals 11
Jumper for Back-Lit Selection 11
PREPARATION FOR PROGRAMMING 12-13
A) Criteria for Codes and Cards 12
B) Security Level of The Operation Media 12-13
C) List of User Information 13
PROGRAMMING AND OPERATION 14-45
Power Up The Keypad 14
Set Keypad into Programming Mode with Master Code 14
Direct Access to Programming Mode with The "DAP" Code – 2 8 2 8 15
System Refreshing with "Refreshing Code" -– 9 9 9 9 15
The Default Values of The Keypad 16
Master Code 17
Super User Code 17
Operation and Functions of The Super User Code 18-19
Common User Codes for Output 1, 2 & 3 20
User Codes/Card For Output 1, 2 & 3 21
Examples – Programming And Operation 22-24
Visitor Codes (For Output 1 Only) 25-26
Duress Codes (For Outputs 1, 2 & 3) 27-29
Operation And Function of The Duress Code 28-29
Output Modes & Timing for Output 1, 2 and 3 30
System Real-Time-Clock 31
Start & Stop Times For Daily Inhibition of Output 1 32-33
Personal Safety And System Lock-Out 34
User Code Entry Mode - Auto or Manual 35
Pacifier Tones On-Off Selection 35
Output Operation Announcer 36
Status LED Flashing On-Off during Standby 36
Door Forced Open Warning & Timing 37
Door Propped-Up Warning & The Delay Time 37
Intelligent Egress Button – An Unique Feature of A Contemporary Keypad 38-39
Where And Why "Going Out" Needs Attention 38-39
Egress Delay , Warning And Alarm 40-41

Door Opening Alarm & Timer 42
Programming Locations For System Expansion 43
Wiegand Data Output Mode 43
Wiegand Data Output Format 44
Operation Modes 45
Close The Programming Mode 45
PROGRAMMING MAKE SIMPLE - For General Users 46-47
FACILITIES FOR WIEGAND OUTPUT 48
WIEGAND OUTPUT FORMATS 49-52
PROGRAMMING SUMMARY CHART 53-55
APPLICATION EXAMPLES 56-57
A Stand Alone Door Lock 56
An Inter-Lock System Using Two Keypads 57
APPLICATION EXPANSIONS 58-61
The Axiliary Readers & Keypad 58
The Split-decoders 59
1) Dual-station Access Control Door Lock 60
2) Multi-station Access Control Door Lock 61
3) Split-decoded Access Control Door Lock 62
4) Split-decoded Multi-station Access Control Door Lock 63
APPLICATION HINTS FOR THE AUXILIARY TERMINALS 64-66
AUXILIARY INFORMATION 67

INTRODUCTION

DK-2862 / DK-2866 MK-II is a self-contained full feature digital access control keypad that combines proximity EM card reader in one unit.

The keypad has three outputs. The output 1 is a solid state relay selectable to drive Fail-safe or Fail-secure electric lock. Solid state relay gives longer service life and prevents sabotage of energizing the output relay to open the door with a strong magnet. The output 2 is a standard relay with N.C. and N.O. dry contacts for auxiliary controls. The output 3 is a transistor open collector output with maximum sink current of 100mA for driving auxiliary device. It also has a N.O. relay dry contact output for driving an external door bell.

The keypad is employing the Tri-Tech design approach capable for system expansion. It works perfectly in stand alone operation, split-decoded operation for security enhancement with the optional decoder, and multi-station operation for user convenience with the auxiliary keypad-readers.

The keypad is ideal for access control and alarm system arm-disarm control. It is also a programmable industrial timer (from 1 second to over 24 hours) for automatic operator system.

The DK-2862 is employing a touch sensing keyboard while the DK-2866 is employing a tact switch keyboard. Apart from the keyboard, both keypads are having the same features and performance.

DK-2862 – Full Feature Keypad with Touch Sensing Keyboard
DK-2866 – Full Feature Keypad with Tact Switch Keyboard

Output 1 : Solid State Relay Output for Fail-safe or Fail-secure Electric Lock
Output 2 : Standard N.C. & N.O. Dry Relay Contacts
Output 3 : Solid State Open Collector Output
Bell Button : N.O. Dry Relay Contact

FEATURES

- A member of the Tri-Tech series keypads compatible with the optional controllers & reader keypads for system expansion
- Loaded with the 2nd generation DK-2800 operation software
- Built-in with all the logics for stand alone, split-decoded and multi-station operations
- Controls "Going in" with User Codes / Cards and "Going out" with feature programmable egress button
- Independent control for the three outputs with programming timer
- Total 1,200 User Codes / Cards for controlling of the three outputs
- Indoor or outdoor installation with IP-55 all weather ingress protection
- Compatible with Fail-safe or Fail-secure electric lock
- Surface mount ABS plastic Housing Painted in metallic black color

Package Contents

- One DK-2862/DK-2866 Keypad
- Two EM Cards
- One Pack of Mounting Screws
- One Programming & Installation Manual

OPTIONAL DEVICES FOR SYSTEM EXPANSION

The Optional Decoders Available for Split-decoded Operation

DA-2800 – Full Feature Decoder with RF Remote Control

DA-2801 – Full Feature Decoder

The Auxiliary Reader / Keypad Available for Multi-station Operation

AR-2802S or A – EM Card Reader

AR-2806S or A – EM Card Reader with Digital Keypad

AR-2807S or A -- EM Card Reader with Digital Keypad

AR-2809S -- EM Card Reader with Digital Keypad

Remark:
The suffix letter "S" stands for standard version and "A" stands for advanced version. The advanced version possesses the standand features and also provides Wiegand and RS-232 data outputs for the custom projects with external controller and PC.

Please contact your local agent for the optional devices.

SPECIFICATIONS

- **Operating Voltage:**
  12V DC Nominal; 11-15V DC
- **Operating Current:**
  60mA (quiescent) to 150mA
- **Operation Temperature:**
  -20 C to +70 C
- **Environmental Humidity:**
  5-95% relative humidity non-condensing
- **Working Environment & Ingress Protection:**
  All weather, IP-55
- **Number of Users:**
  Output 1 – 1,000 (PINs and/or Cards) + 50 Duress Codes
  Output 2 – 100 (PINs and/or Cards) + 10 Duress Codes
  Output 3 – 100 (PINs and/or Cards) + 10 Duress Codes
- **Proximity Card:**
  Standard EM Card or Keyfob, 125Khz
- **Number of Visitor Codes:**
  50, programmable for one time or with the time limit
- **Timings for Code Entry and Card Reading:**
  10 seconds waiting for next digit entry
  30 seconds waiting for code entry after card reading
- **The Timers:**
  Three 1-99,999 Seconds (Over 24 Hours possible) Independent Programmable Timers for O/P 1, 2 & 3
- **Egress Button:**
  Programmable for Instant, Delay with Warning and/or Alarm
  Momentary or Holding Contact for the Exit Delay
- **Input Sensing Terminals:**
  a) Door position, b) Egress, c) O/P 1 inhibit
- **Output Control Terminals:**
  Transistor Open Collector 24VDC/100mA sink Max for the following outputs
  a) Duress, b) Alarm, c) Key Active, d) Output 3, e) Inter-lock
- **Output Contact Ratings:**
  Output Relay 1 – Solid State Relay, Fail-safe or Fail-secure selectable, 3A/16 VDC Max.
  Output Relay 2 – N.C. & N.O. dry contacts, 1A/24VDC Max.
  Door Bell Relay – N.O. dry contact, 1A/24VDC Max.
  Tamper Switch – N.C. dry contact, 50mA/24VDC Max.
- **Dimensions:**
  126(H) X 75(W) X 35-40(D)mm
- **Weight:**
  200g net
- **Housing:**
  ABS Plastic box

Specifications are subject to change for modification without notice

INSTALLATION

ASSEMBLY

DK-2862/DK-2866

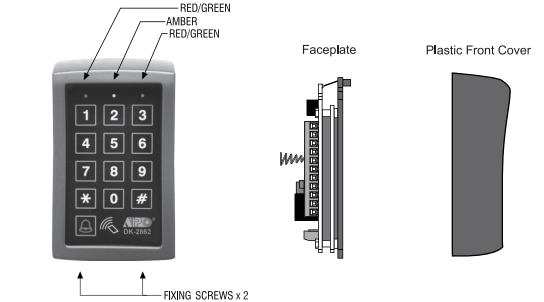

PRECAUTIONS

1) Prevent Interference:

The EM Card reader is working at the frequency of 125Khz. Installation precautions are necessary.

i) Make sure the location for installation has no strong low frequency electro-magnetic wave. Especially in the range of 100-200Khz

ii) If there is more than one keypads with the same operation frequency installed closely in the location, make sure that they are at least 60cm (2ft) apart from each other to prevention interference.

2) Prevent Accidental Short Circuit:

In the previous experience, most of the damages caused in the installation are accidental touching of the components on circuit board with the wires carrying power. Please be patient to study the manual to become familiar with the specifications of the system before starting the installations.

i) Do not apply power to the system while it is in installation.

ii) Check carefully all the wirings are correct before applying power to the system for testing.

CONNECTION TERMINALS

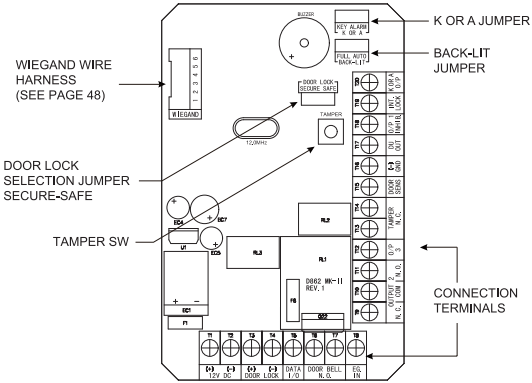

1 - 2 : 12 V DC (Power Input Terminal)

Connect to 12V DC power supply. The (-) supply and the (-) GND are the common grounding points of the system.

3 : (+) 12V Power Supply for The Lock

A (+) supply point for the electric lock, which is common to terminal 1.

4 : (–) Power Supply for The Lock (Output Contact for Door Lock Strike)

A 3 Amp rating solid state switch output contact for electric door lock strike, it switches to (-) in operation. It is selectable for operating Fail-safe or Fail-secure electric lock via jumper setting. Connect the negative side (-) of the electric lock to this terminal and the positive side (+) to terminal 3. The operating time of the contact is programmable. See Location 51.

Important — Set Output Mode for Door Lock

Two types of electric locks are available on the market. It is necessary to confirm that the lock is Fail-safe or Fail-secure in order to make the correct jumper selection. **Wrong selection may cause damage to the lock or the reader.**

- ***Fail-safe Electric Lock –*** Normally energized; power ON to lock, power OFF to unlock
- ***Fail-secure Electric Lock –*** Normally de-energized; power ON to unlock, power OFF to lock

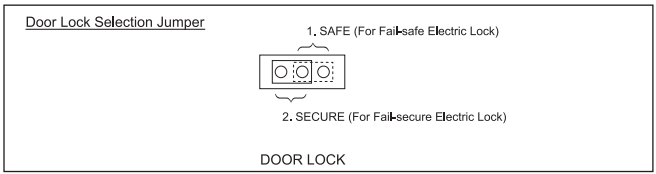

5 : DATA I/O PORT

A bi-directional data communication port prepared for the connection of auxiliary keypad-readers and split-decoder to expand the functions and features of the access control system.

6 - 7 : DOOR BELL (Output Relay Contact for Door Bell)
It is a Normally Open (N.O.) relay dry contact with maximum rating of 24VDC/1Amp. It is prepared as a triggering contact of a low voltage door chime. The contact point keeps close as long as the bell button on the keypad is pressed.

8 : EG IN (Egress Input)
A Normally Open (N.O.) input terminal referring to (-) ground. With the help of connecting a normally opened button to activate Output 1 for door opening in the same manner of using the Group 1 User PINs or Cards.
Egress button is usually put inside the house near the door. More than one egress buttons can be connected in parallel to this terminal. Leave this terminal open if not used.
See Programming Locations 90 and 91 for more information about the Egress Button with other features.

9 - 10 - 11 : OUTPUT 2 (Output Relay 2)
1 Amp relay dry contact controlled by the Group 2 User PINs or Cards for Output 2, it is an auxiliary output ideally for controlling security system or automatic operator. Terminal 9 is Normally Closed (N.C.), terminal 11 is Normally Open (N.O.) and terminal 10 is the common point of the two contacts. The relay is programmable for Start/Stop (toggle) mode or Momentary timing mode. See programming Location 52 for the details.

12 : OUTPUT 3 (NPN Transistor Open Collector Output)
An NPN transistor open collector output that is controlled by the Group 3 User PINs or Cards for Output 3. It has the maximum power rating of 24VDC/100mA sink. It is equivalent to an N.O. (Normally Open) terminal referring to ground. It can be used to drive small power device, such as a relay or a low power control point of other equipment. This output point is programmable for Start/Stop (toggle) mode or Momentary timing mode. See programming Location 53 for the details.

13 - 14 : TAMPER N.C. (Tamper Switch Normally Closed Contact)
A normally closed dry contact while the keypad is secured on its box. It is open while keypad is separated from the box. Connect this N.C. terminal to the 24 hour protection zone of an alarm system if necessary.

15 : DOOR SENS N.C. (Door Position Sensing Input – Normally Close)
A Normally Closed (N.C.) sensing point referring to (-) ground, with the help of a normally closed magnetic contact monitors the open or close status of the door. It initiates the following functions for the system. Connect it with jumper to (-) Ground if not used.

a) Door Auto Re-lock
The system immediately re-locks the door after it is re-closed before the end of the programmed time for output 1. It prevents unwanted "tailgate" entry.

b) Door Forced Open Warning
The keypad generates "door forced open" warning and alarm instantly once the door is forced to open without a valid user PIN, Card or egress button. The warning lasts as long as the time programmed (1-999 sec). It can be stopped with an User PIN or card for output 1 at anytime. See programming Location 80 for the details.

c) Door Propped-up Warning
The keypad generates propped-up warning beeps (does not activates alarm output) while the door is left open longer than the allowable time programmed. The warning will last as long as the door is open until re-closed. See programming Location 81 for the details.

d) Inter-lock Control
The inter-lock control output always goes to (-) while the door is open, which gives signal to disable the other keypad in the inter-lock system. See the Inter-lock terminal description for more information.
e) Door Opening Alarm
Door Opening Alarm is designed for the emergency door only. It is always given when the door is opened unless a valid user code or card is used prior to the door is opened. See programming Location 91 for the details.

16 : (-) GND (Common Ground)
A grounding point of the keypad that is common to terminal 2.

17 : DU OUT (Duress Output)
An NPN transistor open collector output with the maximum power rating of 24VDC/100mA sink. It is equivalent to an N.O. (Normally Open) terminal switching to (-) ground after the Duress Code is entered. Use it to trigger an alarm zone of a security system, or turn on a buzzer to notify a guard.

18 : O/P 1 INHIBIT N.O. (Output 1 Inhibit Control Input – Normally Open)
A Normally Open (N.O.) sensing input point for controlling the Output 1, with this terminal connecting to (-) ground, the **Egress Button, the group of User PINs and Cards for Output 1 are all disabled.** It is prepared mainly for the cross wire connection with the "Inter-lock O/P" point on the other keypad in an Inter-lock system.

NOTE: The inhibit function does not govern the Duress Codes and the Super User Codes. They are always valid.

19 : INTER-LOCK O/P (Inter-lock Control Output)
An NPN transistor open collector output with the maximum power rating of 24VDC/100mA sink. It is OFF at normal condition and it switches to (-) ground immediately for the first 5 seconds after keying in a valid User PIN or reading a card to operate Output 1, then, it will keep tying to (-) ground during the Door Position Sensor is open circuit due to door opening. Use this output point to make cross wire connection with the other keypad's "O/P 1 Inhibit" point in an Inter-lock system to prevent both doors can be opened at the same time.

An Inter-lock System:
An inter-lock system is a two-door system that always allows only one of the doors to open during the operation. While one of the doors is opened, the other door keeps close until the open door is re-closed. It prevents the unauthorized people dashing into a protected area while the doors are in use. An inter-lock system needs two keypads and two door position sensing switches for the two doors.

20 : "K" OR "A" O/P (Keypad Active Output or Alarm Output)
An NPN transistor open collector output with maximum power rating of 24VDC/100mA sink. It is equivalent to an N.O. (Normally Open) terminal referring to ground. It can be used to drive small power device, such as a relay or a low power control point for other equipment. This output point is selectable to give Keypad Active Output or Alarm Output via the "K or A" jumper.

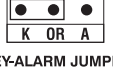

KEY-ALARM JUMPER

a) ***Keypad Active Output ("K")*** --- It switches to (-) ground for 10 seconds on each key touch. It can be used to turn on light, CCTV camera, or buzzer to notify a guard. See Application Hints for more information.

b) ***Alarm Output ("A")*** --- It switches to (-) ground while Alarm occurs in order to trigger external alarm to give notification at remote location.

OTHER FACILITIES

ON-BOARD LED INDICATORS

RED / GREEN (Right) --- It lights up in Green for Output 1 activation; and Red for Output 2 activation.

AMBER (Centre) --------- It flashes in Standby. It shows the system status in synchronization with the beep tones. The standby flashing can be OFF with programming. See Location 73 for the details.

RED / GREEN (Left) ----- It lights up in Red while one of the outputs is inhibited. It is flashing during inhibition paused.

It is the Wiegand LED for feedback indication. It lights up in Green.

PACIFIER TONES & THE LED SIGNALS

The buzzer and the amber LED indicator give following tones and signals respectively for system status:

STATUS	TONES *	AMBER LED
1) In Programming Mode	-----	ON
2) Successful Key Entry	1 Beep	1 Flash
3) Successful Code / Card Entry	2 Beeps	2 Flashes
4) Unsuccessful Code / Card Entry	5 Beeps	5 Flashes
5) Power Up Delay	Continuous Beeps	Continuous Flashes
6) Output Relay Activation **	1 Second Long Beep	-----
7) In Standby ***	-----	1 Flash in 1 Second Interval
8) System Refreshing	-----	Fast Flashes for 2.5 Minutes
9) Card or Code Already Stored in System	1 Long Beep	-----
10) Keypad link-up with Decoder Failed	Continuous 1 Beep/1 sec	-----
11) Real -time-clock stopped after power failure	Continuous 3 Fast Beeps /5 secs	-----

NOTE:

* All Pacifier Tones can be ON or OFF through the programming option at Location 71

* * The Output Relay Activation beep can be selected through the programming option at Location 72

* * * The Standby flashing can be ON or OFF through the programming option at Location 73

JUMPER FOR BACK-LIT SELECTION

1) *Full Back-lit* --- The keypad gives dim backlit in standby. It turns to full backlit when a key button is pressed, then back to dim backlit 10 seconds after the last key button is pressed.

2) *Auto Back-lit* --- The backlit is OFF in standby. It turns to full backlit when a key button is pressed, then back to OFF 10 seconds after the last key button is pressed.

BACK-LIT JUMPER

PREPARATION FOR PROGRAMMING

A) CRITERIA FOR CODES AND CARDS

1) Prime Codes

The prime codes include the a) User Codes, b) Master Code, c) Duress Codes, d) Super User Codes, e) Common User Codes and f) Visitor Codes. All these codes **MUST** be unique. It is not allowed to repeat a prime code for second function.
All the codes in this system can be 4-8 digits for Manual Entry Mode. The codes must be in the same digit length with the Master Codes for Auto Entry Mode. See Location 70 for the details.

2) Prime Cards

All the User Cards are prime cards. They are not allowed to program for second function. e.g. a card was programmed for operating output 1 is not allowed for output 2.
The cards used in this system are 125Khz proximity EM cards.

3) Secondary User Codes

A Secondary User Code is prepared to enhance the security of an user card, which is a code put after a card. The keypad requires both card and code are correct to grant an entry. The secondary code can be repeatedly used for a group of cards; or proprietary with one code for one card.

NOTE:
The keypad will reject repeated use of prime card or prime code in programming and give one long beep indication.

B) SECURITY LEVEL OF THE OPERATION MEDIA

The keypad provides 5 operation Media for owner's selection of security level. See programming Location 10, 20 & 30

1) EM Card Only – Operation Media 1

A general way for access control, just simply read a card to open the door. Security level is moderate but it is user convenient.

2) User Code Only – Operation Media 2

A general way for access control, just simply enter a code to open the door. Security level is moderate but it is user convenient.

3) EM Card + Common User Code – Operation Media 4

The keypad requires both Card and Common User Code are correct to grant an entry. Common User Code is an user code for all the cards. Two media are used in door control. The security level is better than just card or user code alone.
This operation mode can also report Duress Alarm by keying the duress code instead of common user code in emergency when the user is forced to open the door.

4) EM Card + Group Secondary User Code – Operation Media 3

A secondary user code can be repeatedly used for a group of cards in a department. Owner can make a proprietary department code for each department in a company. Only the staff of the department holding a card and knowing the code is accepted to enter. This approach increases the departmental security and prevents a lost card picked up by other group of people in the company to open the door.
This operation mode can also report Duress Alarm by keying the duress code instead of common user code in emergency when the user is forced to open the door.

5) EM Card + Proprietary Secondary User Code – Operation Media 3

The keypad accepts programming with each card having its own proprietary user code to work. It prevents any other people can use the lost card to open the door. Card with proprietary user code approach is ideal for the area that high security is the main concern.

This operation mode can also report Duress Alarm by keying in the duress code instead of Secondary user code in emergency when the user is forced to open the door.

C) LIST OF USER INFORMATION

The keypad can accommodate up to 1,200 users (codes / cards). To avoid confusion and for programming convenience, it is suggested to make a list recording of the user information. It helps the owner to program the user codes and cards smoothly and to trace them afterwards in the future. Here is a suggested format of the list.

List of Users ***(See page 21-24 for reference)***

Example:

User	Name	Location	Media	User ID	Code	Card #	Remark
1	John	10	1	001	/	001	Output 1
2	May	20	2	001	1234	/	Output 2
3	Tom	10	3	002	24680	002	Output 1
4	Tracy	10	4	003	Common	003	Output 1
5							
6							
7							
8							
9							
10							
11							
12							
13							
14							
15							
16							
--							
1,000							

POWER-UP THE KEYPAD

The keypad gives power-up delay of 1 minute after power has been applied. It is the time frame designed for setting the keypad to programming mode with DAP code. See the details of "**DAP CODE – 2 8 2 8**" below.

1) The keypad gives continuous beeps for 1 minute after power-up.

2) The power-up delay can be stopped instantly with [1][2][#] if the delay beep is found annoying and setting the keypad to programming mode with DAP code is not required.

POWER-UP DELAY STOP		VALIDATION
[1][2]	→	[#]

3) The keypad will set itself to Normal Operation Mode automatically after the 1 minute power-up delay expired or it is stopped with [1][2][#] .

SET KEYPAD IN PROGRAMMING MODE WITH MASTER CODE

It is always necessary to set the keypad in programming mode for feature programming

The keypad is in normal operation after power-up delay. Set it in programming mode with Master Code and validate it with [*][*] .

MASTER CODE		VALIDATION
[0][0][0][0]	→	[*][*]

NOTE:

a) For the owner's convenience in programming at the first time, a Master Code 0 0 0 0 has been put into the keypad before exit-factory. It is **NOT** a default code. For security reason, owner should program a personal Master Code to replace it after the keypad is owned.

b) The Mains LED (amber) is ON after the keypad confirms it in programming mode with 2 beeps.

c) **DO NOT** turn off power while the keypad is in programming mode. Otherwise, it may cause error to the data in memory.

DIRECT ACCESS TO PROGRAMMING MODE WITH "DAP" CODE – 2 8 2 8

In case the Master Code is forgotten, apply the following procedures precisely to set keypad into programming mode with DAP code:

1) Switch OFF all the power for 1 minute to ensure that the keypad is fully discharged.

2) Switch ON power again. The keypad is in Power-up Mode for 1 minute. The buzzer gives continuous beeps and the Status LED is flashing. This is the only time frame to accept the DAP code.

3) Press the Egress Button (the button connecting accross EG IN, (Terminal 8) and (-)GND, (Terminal 2) once to enable the keypad for accepting DAP code. The power-up beep stops after the Egress Button is pressed.

4) Key in the DAP code [2][8][2][8] and validate it with [*][*]. The Status LED is ON and the keypad is in programming mode like using Master Code. It is ready to accept new programming data as long as you like until exit programming mode.

EGRESS BUTTON		DAP CODE		VALIDATION
PRESS ONCE	→	[2][8][2][8]	→	[*][*]

5) To program a new Master Code to replace the old one. See "**Record A Master Code**" stated at "Location 01" for the details.

NOTE:
The keypad will set itself to normal operation mode 1 minute after power-up if the Egress Button is not pressed and the DAP code is not keyed in. To set keypad back to power-up mode, repeat procedures 1-4.

SYSTEM REFRESHING WITH "REFRESHING CODE" –- 9 9 9 9

The keypad can be refreshed by cleaning all the programmed old data and set it back to default values except the **Master Code.**

REFRESHING CODE		VALIDATION
[9][9][9][9]	→	[#]

NOTE:
a) Make sure that system refreshing is really required before entering the refreshing code.

b) Refreshing takes few minutes. The status LED (amber) keeps flashing during refreshing.

c) The keypad is back to its default value after refreshing. Re-program of the desired values are necessary.

THE DEFAULT VALUES AFTER REFRESHING

LOCATION	PARAMETERS	DEFAULT FUNCTIONS & VALUES
0 1	Master Code	0 0 0 0 Factory Set, Not a default value *
0 2	Super User Codes	Nil ----- User Program Required
0 3	Common User Code 1	Nil ----- User Program Required
0 4	Common User Code 2	Nil ----- User Program Required
0 5	Common User Code 3	Nil ----- User Program Required
1 0	User Codes & Cards for O/P 1	Nil ----- User Program Required
2 0	User Codes & Cards for O/P 2	Nil ----- User Program Required
3 0	User Codes & Cards for O/P 3	Nil ----- User Program Required
4 0	Visitor Codes	Nil ----- User Program Required
4 1	Duress Code for O/P 1	Nil ----- User Program Required
4 2	Duress Code for O/P 2	Nil ----- User Program Required
4 3	Duress Code for O/P 3	Nil ----- User Program Required
5 1	O/P Mode of The O/P 1	Time = 5 Sec, Momentary
5 2	O/P Mode of The O/P 2	Time = 5 Sec, Momentary
5 3	O/P Mode of The O/P 3	Time = 5 Sec, Momentary
5 5	System Real-Time-Clock	Nil ----- User Program Required
5 6	Start & Stop Time	Nil ----- User Program Required
6 0	Personal Safety & Lock-out	Code = 1, 10 False Code/Card Lock-out 60 Sec
7 0	User Code Entry Mode	Code = 2, Manual Entry Mode
7 1	Pacifier Tones ON-OFF Selection	Code = 1, Pacifier Tone ON
7 2	O/P Operation Announcer	Code = 1 Sec, Notification Beep ON
7 3	Status LED Standby Flashing ON-OFF	Code = 1, Flashing Enabled
8 0	Door Forced Open Warning & Timing	Code = 0, Warning Disabled
8 1	Door Propped-up Warning & Delay	Code = 0, Warning Disabled
9 0	Egress Delay & Warning	Code 1 = 0, Instant, No Delay
		Code 2 = 1, Momentary Contact without Warning
9 1	Door Opening Alarm & Timer	Code = 0, Alarm O/P Disabled
9 2	Wiegand Output Mode	Code = 1, Disabled
9 3	Wiegand Output Format	Code = 1, 26-Bit
9 4	Operation Modes	Code = 0, Keypad Mode

NOTE:
The DAP Code **2 8 2 8** and the Refreshing Code **9 9 9 9** are fixed in the operating system program. It can not be changed in any ways.

MASTER CODE (Location 01)

LOCATION		MASTER CODE		VALIDATION
0 1	→	4 to 8 Digits	→	#
(1)		(2)		(3)

(1) LOCATION

- Key in Location 0 1

(2) MASTER CODE

- Master Code is the authorization code for setting the system to programming mode. It is **NOT** an User Code operating the output relays.
- The Master Code can be 4 to 8 digits.
- When a new master code is keyed in and confirmed, the old master code is replaced.
- The master code is also the **Link-up Code** between the keypad and the optional decoder in Split-decoded operation.

(3) VALIDATION

- Press # key once. Two-beep confirms the entry.

Example:

Set a Master Code "2 2 3 3" —- 0 1 2 2 3 3 #

SUPER USER CODE (Location 02)

The Super User Code has TWO functions. It is prepared to operate the three outputs and make operation of inhibit enable / disable to those outputs.

LOCATION		SUPER USER CODE		VALIDATION
0 2	→	4 to 8 Digits	→	#
(1)		(2)		(3)

(1) LOCATION

- Key in Location 0 2

(2) SUPER USER CODE

- The Super User Code can be 4 to 8 digits.
- When a new Super User Code is keyed in and confirmed, the old one is replaced.

(3) VALIDATION

- Pressing # key to confirm code entry.

Example:

a) Set a Super User Code "2 5 8 0" -— 0 2 2 5 8 0 #

b) Deleted a Super User Code from memory: Key in the Location number and #. -— 0 2 #

OPERATION AND FUNCTIONS OF THE SUPER USER CODE

1) Operate Output 1, 2, and 3

The operation of the Super User Code is just like a normal User Code. Simply key-in the Code with a specific output number for the desired Output. The Super User Code can also be used to reset an operating output timer instantly.

SUPER USER CODE # 1 ———– Output 1 Activates or Resets

SUPER USER CODE # 2 ———– Output 2 Activates or Resets

SUPER USER CODE # 3 ———– Output 3 Activates or Resets

Optional Functions Controlled by Super User Code for Output 1

Apart from controlling of the three outputs 1, 2, and 3; the Super User Code can also be used to enable the optional functions controlling ***Output 1*** for user convenience or security enhancement.

Super User Code and Egress Button are excluded for any system inhibition and lockup functions; they are valid for door open at anytime for safety.

2) Override The Door Lock Controlled by Output 1 (Keep Door Un-locked)

The Output 1 is usually for door lock control. In some situations, the door may require un-locked for a period of time to allow door opening without User Code or EM Card for entry / exit convenience. This function Starts / Stops in toggle with the following code entry.

SUPER USER CODE # 7 ———- The Door is Un-locked, Start / Stop in Toggle

NOTE :

- The door is un-locked while the function is enabled. The "Output 1" LED (Green) turns ON.
- **Do not** forget to stop this function after use because the door is un-locked. Also, the system refuses the optional functions (3) & (4) while Override function comes into effect.
- This feature is ***good for all the "Fail-safe electric locks".***
- ***"Fail-secure electric lock"*** requires power to keep in un-locked condition. It takes high current all the time while the function comes into effect and ***may cause damage*** to it. This function is not recommended for Fail-secure electric lock.

REMARK :

While SUPER USER CODE # 7 is in operation to hold the door lock open, the functions that rely on the door sensor (such as a magnetic contact) and the User Codes for output 1 are all temporarily suspended until SUPER USER CODE # 7 is keyed in again to release the door hold function.

The following are the temporarily suspended functions:

- Door Auto-relock
- Door Forced Open Warning (at Location 80)
- Door Propped-up Warning (at Location 81)
- Door Opening Alarm (at Location 91)
- Dual Keypad Inter-lock Operation
- All User Codes Including Super User Code for Output 1
- Duress Output Actuated by The Duress Code for Output 1

3) Pause The Scheduled Daily Inhibition for Output 1 (Temporarily Disable The Inhibition)

The scheduled inhibition can be programmed and applied to Output 1 with daily start and stop times. It can be stopped temporarily if required; such as the staff work overtime after office hours going into the inhibition period. This function Starts / Stops in toggle with the following code entry. It can be done before or during the inhibition period.

SUPER USER CODE # 8 ———— Door Lock Operation Resumes, Start / Stop in Toggle

NOTE :

- The "INHIBIT" LED (Red) is ON in inhibition and turns to Flashing while pause is into effect.
- See ***Programming Locations 55 & 56*** for more information Daily Inhibition.

4) Inhibit All The User Codes & EM Cards for Output 1 (Disable Access Control Manually)

To enhance the security of the access control keypad, the owner can stop the keypad after office hour or while the house is nobody inside. Once the Output 1 (for door lock control) is inhibited, all the User Codes / Cards for it become invalid and those people holding the User Code or Card are refused. This function Starts / Stops in toggle with the following code entry.

SUPER USER CODE # 9 ———— Door Lock Operation Inhibited, Start / Stop in Toggle

NOTE :

- The door is locked during Output 1 inhibited and the "INHIBIT" LED (Red) is ON.
- Inhibition applies to all User Codes and EM Cards for Output 1 only. Output 2 & 3 are not affected.

COMMON USER CODES FOR OUTPUT 1, 2 & 3 (Locations 03, 04, & 05)

The Common User Codes 1, 2 and 3 are prepared for operating of the Output 1, 2 and 3 respectively as an enhance code. The Common User Codes **MUST** work in the form of "Card + Common Code" to operate the outputs to increase the security of the access control system. See Media 4 at Locations 10, 20 & 30 for more information.

NOTE: Common User Code alone can **NOT** operate the Outputs directly.

LOCATIONS		COMMON USER CODE		VALIDATION
0 3 - 0 5	→	4 to 8 Digits	→	#
(1)		(2)		(3)

(1) LOCATIONS

- 0 3 – Location Stores The Common User Code for Output 1
- 0 4 – Location Stores The Common User Code for Output 2
- 0 5 – Location Stores The Common User Code for Output 3

(2) COMMON USER CODES

- The Common User Code can be 4 to 8 digits.
- When a new Common User Code is keyed in and confirmed, the old one is replaced.

(3) VALIDATION

- Pressing # key to confirm code entry.

Example:

a) Set a Common User Code "1 3 5 7" for Output 1 —- 0 3 1 3 5 7 #

b) Deleted a Common User Code from memory: Key in the Location number and #. -— 0 3 #

USER CODES / CARDS FOR OUTPUT 1, 2 & 3 (Locations 10, 20 & 30)

Total 1,200 User Codes / Cards are available for controlling of the three outputs.

LOCATIONS		MEDIA		USER ID		CARD / USER CODE		VALIDATION
1 0 - 3 0	→	1 - 5	→	0 0 0 - 9 9 9	→	Card / User Code Entry	→	#
(1)		(2)		(3)		(4)		(5)

(1) LOCATIONS (User Groups)

1 0 – Group 1 – 1,000 User Codes / Cards for controlling Output 1

2 0 – Group 2 – 100 User Codes / Cards for controlling Output 2

3 0 – Group 3 – 100 User Codes / Cards for controlling Output 3

(2) MEDIA (Operation Media)- please also see page 12 for more information of their security level

1 – Cards Only – 125Khz Proximity EM Card

2 – User Codes Only – 4-8 Digits

3 – Cards + Secondary User Code(s) – **See Note (a)**

4 – Cards + Common User Code – **See Note (b)**

5 – Delete Cards / User Codes from the selected User ID – **See Note (c)**

0 9 9 9 – Group Clearing. Clear all the User Codes & Cards of the selected User Group Location. Clearing takes few seconds to a minute.

(3) USER ID (The IDs of The User Codes and Cards)

0 0 0 – 9 9 9 – 1,000 User IDs for the User Codes & Cards in User Group 1 (Output 1)

0 0 1 – 1 0 0 – 100 User IDs for the User Codes & Cards in User Group 2 (Output 2)

0 0 1 – 1 0 0 – 100 User IDs for the User Codes & Cards in User Group 3 (Output 3)

(4) CARD / USER CODE

Read EM Card or **key in User Code** into each assigned User ID.

(5) VALIDATION

Press the # key once. Two-beep confirms the entry.

NOTE:

(a) The Secondary User Code is a user code putting after a card in programming. It can be a proprietary user code for each user card or a code repeatedly used for a group of user cards as group user code (e.g. for a group of staff working in the same department).

(b) The Common User Codes for the Output 1, 2 & 3 have been programmed first at Locations 03, 04 & 05 respectively. It is not necessary to key in the code again in programming here and it will follow the card automatically after the card is read.

(c) Deletion of an User Code or Card (if the card was lost) can be done by keying-in its ID number. For deleting an existing cards, simply read the card once and confirm. It does not require the ID number. The Card includes the combinations of (1) Card Only, (2) Card + Secondary User Code and (3) Card + Common User Code.

EXAMPLES – PROGRAMMING AND OPERATION

1) Example 1 – EM Card Only :

i) Programming :

1 0	1	0 0 1	Read Card	#
(a)	(b)	(c)	(d)	(e)

(a) The card is programmed for operating Output 1
(b) The operation is medium EM Card only
(c) Take ID number 001 in Group 1 to store the card, which is one of the IDs in 000-999
(d) Put the card close to the reader, one beep confirms the reading
(e) Press # to store the "Card", two-beep confirms a valid entry

ii) Operation : (while the system is back to operation mode)

Read Card
(a)

(a) Read the EM card. Two-beep confirms the card is read and Output 1 activates

2) Example 2 – Private User Code Only :

i) Programming :

2 0	2	0 0 1	1 2 3 4	#
(a)	(b)	(c)	(d)	(e)

(a) The Private User Code is programmed for operating Output 2
(b) The operation medium is Private User Code only
(c) Take ID number 001 in Group 2 to store the Private User Code, which is one of the IDs in 001-100
(d) Put Private User Code "1 2 3 4" into the storage location
(e) Press # to store the "Private User Code", two-beep confirms a valid entry

ii) Operation : (while the system is back to operation mode)

1 2 3 4	#
(a)	(b)

(a) Key in the Private User Code "1 2 3 4"
(b) Confirm it with the # key. Output 2 activates

3) Example 3 -- EM Card + Secondary User Code :

i) Programming :

1 0	3	0 0 2	Read Card	2 4 6 8 0	#
(a)	(b)	(c)	(d)	(e)	(f)

(a) The card is programmed for operating Output 1

(b) The operation medium is EM Card + Secondary User Code

(c) Take the ID number 002 in Group 1 to store the Card & Code, which is one of the IDs in 000-999

(d) Put the card close to the reader. One beep confirms the reading

(e) Put Secondary User Code "2 4 6 8 0" after reading of card

(f) Press # to store the "Card + Secondary User Code", two-beep confirms a valid entry

ii) Operation : (while the system is back to operation mode)

Read Card	2 4 6 8 0	#
(a)	(b)	(c)

(a) Read the EM card. Two-beep confirms the reading and 30 seconds waiting time is given for entry of the User Code, the Amber LED keeps flashing

(b) Key in the Secondary User Code "2 4 6 8 0"

(c) Confirm it with the # key. Output 1 activates

4) Example 4 – EM Card + Common User Code:

i) Programming :

1 0	4	0 0 3	Read Card	#
(a)	(b)	(c)	(d)	(e)

(a) The card is programmed for operating Output 1

(b) The operation medium is "EM Card + Common User Code"

(c) Take ID number 003 in Group 1 to store the card, which is one of the IDs in 000-999

(d) Read the EM card. One beep confirms the reading. (No need to key in a Common User Code but there MUST be a Common User Code already recorded in Location 03; (or 04, 05 for O/P 2, O/P 3).

(e) Press # to store the "Card". Two-beep confirms a valid entry

ii) Operation : (while the system is back to operation mode)

Read Card	Common User Code	#
(a)	(b)	(c)

(a) Read the EM card. Two-beep confirms the reading and 30 seconds waiting time is given for entry of the Common User Code, the Amber LED keeps flashing

(b) Key in the Common User Code "1 3 5 7" (the number programmed in "Location 0 3" for Output 1 in the previous Example)

(c) Confirm it with the # key. Output 1 activates

5) Example 5 -- Delete An User Code & / or EM Card (for O/P 1, 2 or 3) :

i) Delete An User Code or A Lost EM Card

1 0	5	User ID	#
(a)	(b)	(c)	(d)

(a) Key in the User Group that the User ID belongs to. "10" for Group 1, "20" for Group 2, and "30" for Group 3
(b) Key in "5" that is the Command Code for making a deletion
(c) Key in the User ID that stored the User Code, the lost EM card or the EM Card+User Code
(d) Press the # key. Two-beep confirms a valid entry and the Code and/or Card in that User ID is cleared

ii) Delete an EM Card

1 0	5	Read Card	#
(a)	(b)	(c)	(d)

(a) Key in the User Group that the EM Card belongs to. "1 0" for Group 1, "2 0" for Group 2, and "3 0" for Group 3
(b) Key in "5" that is the Command Code for making a deletion
(c) Read the EM card. One-beep confirms the reading. Read the Card only also makes a valid deletion to the Card working with the Common User Code or the Secondary User Code
(d) Press the # key. Two-beep confirms a valid entry. The EM Card in that User ID is cleared. Key in the User ID is not required.

6) Example 6 – Clear The Whole Group of Users :

Whole group of users including the Codes and Cards can be cleared with the following command.

1 0	0 9 9 9	#
(a)	(b)	(c)

(a) The User Group 1 – "10" is selected to be cleared. "20" for Group 2 & "30" for Group 3
(b) Key in the Group Deletion Command, 0 9 9 9
(c) Confirm the deletion with #. All the User Codes and Cards in Group 1 are cleared. It takes few seconds to a minute to complete depending on the data stored.

7) Example 7 – Report A Duress While Using EM Card :

The Duress Codes are Prime User Codes in the system. In the "EM Card + Secondary User Code" or "EM Card + Common User Code" operation, they can be used to replace the "Secondary User Code" or the "Common User Code" to operate the specific output and report a duress alarm event. Programming is not required. The system has this function automatically while Duress Code exists.

Operation : (while the system is in the operation mode)

Read Card	Duress Code	#
(a)	(b)	(c)

(a) Read the EM card. Two-beep confirms the reading and 30 seconds waiting time is given for entry of the Duress Code, the Amber LED keeps flashing
(b) Key in one of the Duress Codes for the specific output (the Code programmed in "Location 41, 42, or 43" for Output 1, 2 and 3 respectively)
(c) Confirm it with the # key. The specific Output activates in a normal way and the Duress Output also activates to report Duress Event to an alarm system.

NOTE: The Duress Event can not be reported if the operation mode is EM Card alone. It is required to key in the Duress Code directly instead of EM card to report Duress Event.

VISITOR CODES (FOR OUTPUT 1 ONLY) (Location 40)

The Visitor Codes are temporary user codes for Output 1 (mainly for door strike in access control). They can be programmed as "**One Time Codes**" or "**Codes with Time Limit**". The Visitor Codes will be cleared automatically after use if they are one time codes, or, when the allowed time expires.

LOCATION		VISITOR ID		VALID PERIOD		VISITOR CODE		VALIDATION
4 0	→	0 1 – 5 0	→	0 0 or 0 1 – 9 9	→	4-8 DIGITS	→	#
(1)		(2)		(3)		(4)		(5)

(1) LOCATION

Key in Location 4 0

(2) VISITOR ID

0 1 – 5 0 — 50 Visitor IDs for the 50 visitor codes. They are Two-digit numbers

0 9 9 9 — Clear all the Visitor Codes in Location 40. Please see the Programming example below for the details.

(3) VALID PERIOD

The codes in this box **MUST** be two digits and they represent the time of operation.

0 0 — **One Time Code**

One Time Code has no time limit but it can only be used for ONCE. It is cleared by the system automatically after use.

0 1 - 9 9 — **Time Limit in Hour(s)**

The Visitor Code can be set with the valid time limit of 1 Hour to 99 Hours with a two-digit number of 01 to 99. The visitor code is cleared by the system when the time limit reaches.

(4) VISITOR CODES

- The Visitor Codes can be 4-8 digits for Manual Mode code entry.
- The Visitor Codes MUST be in the same digit length with the Master Code for Auto Mode code entry.
- The Visitor Codes can not reset Duress Output.
- When a new Visitor Code is put in the same Code box, the old code is replaced.

NOTE: All Visitor Codes will be cleared after power down to prevent extension/confusion of their valid time limit.

(5) VALIDATION

Press # key once. Two-beep confirms the entry.

EXAMPLES:

Example 1: Set a "One Time Visitor Code" with the number of "1 2 6 8" for the Output 1

4 0	0 1	0 0	1 2 6 8	#
(a)	(b)	(c)	(d)	(e)

(a) Visitor Code Programming, **(b)** The Visitor ID, **(c)** An One Time Code, **(d)** The Visitor Code, **(e)** Entry Confirmation

Example 2: Set a "Visitor Code" with the number of "1 3 7 8" that is valid for three hours

4 0	0 2	0 3	1 3 7 8	#
(a)	(b)	(c)	(d)	(e)

(a) Visitor Code Programming, **(b)** The Visitor ID, **(c)** Valid for 3 Hours, **(d)** The Visitor Code, **(e)** Entry Confirmation

Example 3: Delete a "Visitor Code" from Vistor ID 02 in the memory

4 0	0 2	#
(a)	(b)	(c)

(a) Visitor Code Programming, **(b)** The Visitor ID, **(c)** Delete Confirmation

Example 4: Clear all "Visitor Codes" in Location 40

4 0	0 9 9 9	#
(a)	(b)	(c)

(a) Visitor Code Location, **(b)** The Deletion Command Code, **(c)** Confirmation, all Visitor Codes are cleared

DURESS CODES (FOR OUTPUTS 1, 2 & 3) (Locations 41, 42 & 43)

Duress Codes are prepared for those **Important Persons** in case of **DURESS** while he is operating the access control keypad. The duress code operates like a normal User Code for Output 1, 2 or 3, and at the same time activates the Duress Output without any indication. The user may use it to report an emergency and ask for help silently when he is forced to operate the keypad if the Duress Output is connected with a security system (for example, an Auto-dialer).

NOTE: The Duress Codes are always valid. They are not governed by any inhibit or lockup function in the system.

LOCATIONS		CODE ID		DURESS CODE		VALIDATION
4 1 – 4 3	→	0 1 – 5 0	→	4–8 DIGITS	→	#
(1)		(2)		(3)		(4)

(1) LOCATIONS

4 1 – **Duress Codes for Output 1**

4 2 – **Duress Codes for Output 2**

4 3 – **Duress Codes for Output 3**

(2) DURESS CODE IDs

0 1 - 5 0 **50 Duress Code IDs for The Output 1**

0 1 - 1 0 **10 Duress Code IDs for The Output 2**

0 1 - 1 0 **10 Duress Code IDs for The Output 3**

0 9 9 9 = **Clear all the Duress Codes from the selected Location group.**
Please see the programming example below for the details.

(3) THE DURESS CODES

50, 10 and 10 Duress Codes can be programmed for Output 1, 2 and 3 respectively. They are stored in their two-digit Code ID box. When a new Code is put into the same Code ID box, the old code is replaced.

- The Duress Codes are 4-8 digits for Manual Mode code entry.
- The Duress Codes MUST be in the same digit length with the Master Code for Auto Mode code entry.
- Always set a Duress Code that is easy to remember in Panic Situation. Only one number different from the daily used User Code is highly recommended.
- **Example**: User Code is **1 3 6 9**, then **3 3 6 9** or **1 3 6 0** might be a good choice for the Duress Code.
- The **Duress Code** can also be used to **replace the Secondary User Code or Common User Code** in Card reading for the Duress reporting.

(4) VALIDATION

Press # key once. Two-beep confirms the entry.

EXAMPLES:

Example 1: Set a "Duress Code" with the number of "3 3 6 9" for Output 1

4 1	0 1	3 3 6 9	#
(a)	(b)	(c)	(d)

(a) Duress Code for Output 1, **(b)** Duress Code ID, **(c)** The Duress Code, **(e)** Entry Confirmation

Example 2: Set a "Duress Code" with the number of "2 3 9 8 0" for Output 2

4 2	0 1	2 3 9 8 0	#
(a)	(b)	(c)	(d)

(a) Duress Code for Output 2, **(b)** Duress Code ID, **(c)** The Duress Code, **(e)** Entry Confirmation

Example 3: Delete an Output 1 "Duress Code" from Duress Code ID 0 1 in the memory

4 1	0 1	#
(a)	(b)	(c)

(a) Duress Code for Output 1, **(b)** The Duress Code ID, **(c)** Delete Confirmation

Example 4: Clear The Whole Group of Duress Codes from Location 4 1 :

4 1	0 9 9 9	#
(a)	(b)	(c)

(a) Group Location 4 1 , **(b)** The Group Deletion Command, **(c)** Confirmation, all Duress Codes in Location 4 1 are cleared.

OPERATION AND FUNCTION OF THE DURESS CODE

The Duress Code(s) has double actions when it is keyed in. It activates the Duress Output (for duress alarm) and at the same time activates the specific Relay Output 1, 2 or 3 just like a normal User Code. The Duress Code always activates the Relay Output in its group, but, does not de-activate (stop) the Duress Output. **ONLY a normal User Code or Card in anyone of the user groups, or a Super User Code** can reset (de-activate) the Duress Output.

For Example:

Key in The Duress Code 3 3 6 9 of the Group 1 (for Output 1) To Command The Duress Function :

3 3 6 9 # —— Duress Output activates (switches to (-) ground) & Output 1 activates.

Key in The Duress Code 3 3 6 9 in Group 1 (for Output 1) Again :

3 3 6 9 # —— Duress Output keeps activating and no change in its state (keeps to (-) ground) & Output 1 activates again.

Key in A Normal User Code to Reset Duress (For Example: 1369 is An User Code for Output 1):

1 3 6 9 # —— Duress Output resets (back to OFF state) but does not activate Output 1.

Report Duress in EM Card Operation

The Duress Codes are Prime User Codes in the system. In the "**EM Card + Secondary User Code**" **or** "**EM Card + Common User Code**" operation, they can be used to replace the "Secondary User Code" or the "Common User Code" to operate the specific output and report a duress alarm event. Programming is not required. The system has the function automatically while Duress Code exists.

Operation : Taking Duress Code 3 3 6 9 in Group 1 for Output 1 As Example

Read Card	3 3 6 9	#
(a)	(b)	(c)

a) Read the EM card. Two-beep confirms the reading and 30 seconds waiting time is given for the entry of Duress Code, the Amber LED keeps flashing

b) Key in the Duress Codes 3 3 6 9 for operating Output 1

c) Confirm it with the # key. Output 1 activates in a normal way and the Duress Output also activates to report Duress Event to an alarm system if connected.

NOTE: Duress Event can not be reported with EM Card alone. User can only directly use Duress Code to open the door and report duress event in emergency

OUTPUT MODE & TIMING FOR OUTPUT 1, 2 AND 3 (Locations 51, 52 & 53)

The three outputs are programmable for Start/Stop or Timing modes. Apart from door access control, alarm arm-disarm control, they are also **universal timers for automatic operators in industry** with their 99,999 seconds (over 24 hours) programmable timer.

LOCATIONS		OUTPUT MODE & TIME		VALIDATION
5 1 – 5 3	→	0 or 1 – 9 9 9 9 9	→	#
(1)		(2)		(3)

(1) LOCATIONS

5 1 -- Location for Output 1
5 2 -- Location for Output 2
5 3 -- Location for Output 3

(2) OUTPUT MODE & TIMING

0 - Start /Stop Mode (Toggle)

The number 0 sets the output to **Start / Stop mode.** The output **Starts** when an User Code and/or Card is entered/read; the output **Stops** when an User Code and/or Card is entered/read again.

1 - 9 9 9 9 9 **— Seconds Momentary — (Default — Momentary 5 Seconds)**

The output can be set in **Momentary Mode** with the time of 1 second to 99,999 seconds. The output will reset automatically when the time expires.

(3) VALIDATION

Press # key once. Two-beep confirms the entry.

RESET OUTPUT TIMER WITH SUPER USER CODE

The Output Timer can be **RESET manually at anytime with the Super User Code** that operates the desired output before the end of the time.

Example:

Reset Output 1 Timer — SUPER USER CODE # 1 **———— Output 1 stops**

Reset Output 2 Timer — SUPER USER CODE # 2 **———— Output 2 stops**

Reset Output 3 Timer — SUPER USER CODE # 3 **———— Output 3 stops**

SYSTEM REAL-TIME-CLOCK (Location 55)

This 24 hour real-time-clock provides the daily time base for starting and stopping the function of inhibition to relay output 1 (mainly for electric door lock strike).

No real-time-clock setting is required if daily start-stop inhibition at Location 56 is not enabled.

LOCATION		CURRENT REAL TIME		VALIDATION
5 5	→	H H : M M	→	#
(1)		HOURS MINUTES (2)		(3)

(1) LOCATION

Key in Location 5 5

(2) CURRENT REAL TIME

H H : M M – The current time in Hour and Minute. The allowed time figure is **00:00 – 23:59**

The time setting is based on 24 hours daily with the first two digits for hours and the last two digits for minutes. The time in second always starts at 0 0.

(3) VALIDATION

Press # key once.

Two-beep confirms the setting and the clock starts to count in 24 hour basis from the programmed current time.

Programming Examples:

a) Set the current time of "10:30" (AM) to the keypad —— 5 5 1 0 3 0 #

b) Set the current time of "6:45" (PM) to the keypad —— 5 5 1 8 4 5 #

IMPORTANT NOTE:

1) The real-time-clock stops after power failure, which makes the real-time inhibition loses its time base. **It is necessary to re-program the system's real-time-clock** unless the keypad is back up with UPS.

2) The keypad gives **warning beeps of 3 fast beeps/ 5 seconds continuously after power failure** until the real-time-clock is re-programmed.

3) No "**after power failure warning beep**" will be given if **Location 56** is not programmed with Start/Stop times.

4) Suggest to program the clock every 3-6 months to keep time accuracy; or when time deviation is found.

START & STOP TIMES FOR DAILY INHIBITION OF OUTPUT 1 (Location 56)

Setting with start and stop times into the keypad, the real-time inhibition period for output 1 will recycle daily until the time settings are cleared.

This function works with the real-time-clock. Set up the real-time at Location 55 is necessary.

For safety reason, the Egress Button is designed always valid. The door lock (controlled by output 1) can be opened with it at anytime during inhibition.

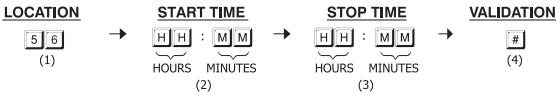

(1) LOCATION

Key in Location 5 6

(2) START TIME

H H : M M – Set the real-time inhibition starting time in Hour and Minute. The allowed time figure is **00:00 – 23:59**

The starting time is based on 24 hours daily with the first two digits for hours and the last two digits for minutes. The time in second always starts at 0 0.

(3) STOP TIME

H H : M M – Set the real-time inhibition stopping time in Hour and Minute. The allowed time figure is **00:00 – 23:59**

The stopping time is based on 24 hours daily with the first two digits for hours and the last two digits for minutes. The time in second always starts at 0 0.

(4) VALIDATION

Press # key once.

Two-beep confirms the setting.

Programming and Operation Examples:

(i) Set the starting and stopping time for the real-time inhibition period

a) Set Inhibition Period from 12:30 PM (today) – 1:30 PM (same day) for lunch time:

[5] [6] [1] [2] [3] [0] [1] [3] [3] [0] [#]

b) Set Inhibition Period from 6:30 PM (today) – 8:15 AM (next day) for office close:

[5] [6] [1] [8] [3] [0] [0] [8] [1] [5] [#]

NOTE:

1) The start and stop time figures are 24 hours basis. They are 4-digit figures from the smallest **00:00** to the largest **23:59.**

2) Entry of the two figure values from **Small** (Start) to **Large** (Stop) for the period of inhibition; the inhibition will start and stop in the same day. See **example (a).**

3) Entry of the two figure values from **Large** (Start) to **Small** (Stop) for the period of inhibition; the inhibition will start at the time of the day; thus stop in the next day. See **example (b).**

4) The keypad does not accept the "Start" and "Stop" times with same value. The two time figures must be different.

(ii) Clear the function of inhibition

Clear the time settings to stop the function of inhibition:

[5] [6] [#]

(iii) Pause the real-time inhibition manually

The real-time inhibition can be stopped temporarily if require; such as the staff work overtime in office. The inhibition can be paused manually with Super User Code before or during the inhibition period. The pause is toggle and does not affect the real time period counting.

[Super User Code] [#] [8] —— Inhibition paused [Inhibit LED(Red) Flashing]

[Super User Code] [#] [8] —— Inhibition resumes [Inhibit LED(Red) ON]

NOTE:
The "INHIBIT" LED(Red) is flashing during the paused period; and it is ON after inhibition resumes.

(iv) Open door lock with Super User Code at anytime

The Super User code is valid all the time even in the inhibition period. This function does not affect the real time period counting.

[Super User Code] [#] [1] —— The door is open

PERSONAL SAFETY AND SYSTEM LOCK-UP (Location 60)

LOCATION		LOCK-UP OPTIONS		VALIDATION
6 0	→	1 to 2 Digits	→	#
(1)		(2)		(3)

(1) LOCATION

Key in Location 6 0

(2) LOCK-UP OPTIONS

The Options are represented by the following Numbers. They are described below:

1 –- After 10 successive false Card/User Code trials, the keypad locks during 60 seconds. – (Default)

2 –- After 10 successive false Card/User Code trials, activates the Duress output to switch to (-) ground.The Duress Output can be released with any user Code or Card in the User Group 1 or Super User Code.

5 - 1 0 –- Selection of after 5 to 10 successive Card/User Code trials, the keypad locks during 15 minutes. The keypad can be reset to release the lock-up with the "Super User Code" in the following way.

Example: Release the lock-up – SUPER USER CODE # 9

0 0 -– Disappearance of all the above lock-up securities.

(3) VALIDATION

Press # key once. Two-beep confirms the entry

USER CODE ENTRY MODE – Auto or Manual (Location 70)

	LOCATION		ENTRY MODES		VALIDATION
(1) LOCATION Key in Location 7 0	7 0 (1)	→	1 or 2 (2)	→	# (3)

(2) USER CODE ENTRY MODES

Two modes 1 and 2 are available for User Code entry options. The **EM Card is always in Auto Entry Mode** and is not affected by the selection here.

1 –– Auto Entry Mode

Auto Entry Mode requires no pressing of the # key after code entry for code checking.

In the Auto Entry Mode, the **User Codes MUST be set in the same digit length of the Master Code** (For example, if the Master Code is 5 digits, then all User Codes must be in 5 digits as well. All other User Codes not in 5 digits become invalid). When the number of digits reaches, the system will check the User Code automatically. Good for high traffic access control.

2 –– Manual Entry Mode – (Default)

Manual Entry Mode always requires the # key following the User Code for code checking. The User Codes can be **4-8 digits arbitrary** and they are **NOT** required to be in the same digit length of the Master Code. Manual Entry increases the level of security in code trial by the unauthorized people.

(3) VALIDATION

Press # key once. Two-beep confirms the entry

PACIFIER TONES ON-OFF SELECTION (Location 71)

	LOCATION		FUNCTION MODES		VALIDATION
(1) LOCATION Key in Location 7 1	7 1 (1)	→	1 or 0 (2)	→	# (3)

(2) FUNCTION MODES FOR PACIFIER TONES

Pacifier Tone is the Beep Tones from the keypad, which include the tones of Successful Key entry (1 beep) and the Unsuccessful User Code/Card entry (5 beeps).

NOTE:

The beeps for the Warning and the Power-up Delay do not belong to pacifier tones and can not be OFF.

1 –– Pacifier Tone ON – (Default)

All the Pacifier Tones available from the keypad are enabled. They are the response tones indicating the operation status of the keypad after a Card/User Code is entered.

0 –– Pacifier Tone OFF

All the Pacifier Tones are OFF. Good for place needs for a silent environment.

(3) VALIDATION

Press # key once. Two-beep confirms the entry

OUTPUT OPERATION ANNOUNCER (Location 72)

LOCATION		FUNCTION MODES		VALIDATION
7 2 (1)	→	1 or 0 (2)	→	# (3)

(1) LOCATION

Key in Location 7 2

(2) FUNCTION MODES FOR OUTPUT ANNOUNCER

Output announcer gives notification beep on the operation status of the outputs. There are two notification modes available for the selection.The notification is also OFF while the Pacifier Tone OFF mode in the Location 71 is selected.

NOTE:

In multi-station operation, the output announcer only goes to the keypad that has been operated but not all the keypads in the system.

0 -– No Notification

The output operation notification is OFF but does note affect the normal pacifier tones.

1 –- 1 Second Long Notification – (Default)

1 second notification beep is given when the output relay activates. It is prepared to notify the person outside the door when the lock is released and the door can be opened. It is good for door lock that gives no sound when it activates, such as a magnetic lock.

2 -– 2 Short Beeps Notification

2 short beeps notification is given when the output relay activates.

(3) VALIDATION

Press # key once. Two-beep confirms the entry

STATUS LED FLASHING ON-OFF DURING STANDBY (Location 73)

LOCATION		FUNCTION MODES		VALIDATION
7 3 (1)	→	1 or 0 (2)	→	# (3)

(1) LOCATION

Key in Location 7 3

(2) FUNCTION MODES FOR STANDBY FLASHING LIGHT

Some people find the flashing light of the status LED (the amber LED) is annoying during standby, especially at the night time. The standby flashing can be ON-OFF with the setting here.

1 -– Standby Flashing ON – (Default)

The Status LED gives Standby Flashing all the time. It also gives the light indications showing the operation status of the system.

0 –- Standby Flashing OFF

The Standby Flashing is OFF but it does not affect the system status indications.

(3) VALIDATION

Press # key once. Two-beep confirms the entry

DOOR FORCED OPEN WARNING & TIMING (Location 80)

LOCATION		FUNCTION MODES		VALIDATION
8 0	→	0 or 1 – 9 9 9	→	#
(1)		(2)		(3)

(1) LOCATION

Key in Location 8 0

(2) FUNCTION MODES FOR DOOR FORCED OPEN WARNING

The Door Forced Open Warning function works with a Door Position Sensing switch equipped on the door (usually a magnetic contact). Once a Timing Figure is put into the Function Mode box, the warning mode is enabled.

0 **— Door Forced Open Warning OFF – (Default)**

1 - 9 9 9 **— Door Forced Open Warning & Alarm Enabled & Timing**

The Timing Figure for the Warning can be 1-999 seconds. The keypad generates the door forced open warning beeps and activates the alarm output (Terminal 13) instantly if the door is forced to open without a valid User Code/Card or pressing of Egress Button. The beeps and alarm will last as long as the time set on the timer and it can be stopped at anytime with an User Code/Card in Group 1 before the end of the time.

The Manner of The Door Forced Open Warning:

a) The door is forced to open (without using Code/Card or Egress Button) **– Warning & Alarm**
b) The door is opened with Code/Card **– No Warning or Alarm**
c) The door is opened with Egress Button **– No Warning or Alarm**

(3) VALIDATION

Press # key once. Two-beep confirms the entry

DOOR PROPPED-UP WARNING & THE DELAY TIME (Location 81)

LOCATION		FUNCTION MODES		VALIDATION
8 1	→	0 or 1 – 9 9 9	→	#
(1)		(2)		(3)

(1) LOCATION

Key in Location 8 1

(2) FUNCTION MODES FOR DOOR PROPPED-UP WARNING

If somebody opened the door and left it open longer than the allowable delay time, the keypad will generate door propped-up warning **until the door is re-closed.** There is warning beeps from the keypad only but it does not activate the alarm output. This function works with a door position sensing switch equipped on the door.

0 **— Door Propped-up Warning OFF – (Default)**

1 - 9 9 9 **— Door Propped-up Warning ON & The Delay Time**

The Delay Time can be 1 to 999 seconds. It is the allowed time for door open without starting warning.

(3) VALIDATION

Press # key once. Two-beep confirms the entry

INTELLIGENT EGRESS BUTTON – AN UNIQUE FEATURE OF THE KEYPAD

INTRODUCTION

Most of the keypads for access control are just for controlling "Going In" from outside. It is not enough for today's access control systems. In fact, controlling "Going Out" is also very important in some public passage areas those are not allowed to use locks or digital keypads for stopping of "Going Out" due to safety reasons. Such as hospitals, kindergartens, elderly homes, convenient stores, emergency exits etc.. The wardens, teachers, shopkeepers and the guards are always required to keep an eye on people to prevent unattended leaving, shoplifting, and unauthorized use of the emergency exits.

The Intelligent Egress Button can be programmed to do something to get attention from the person on duty before the door is opened. The button offers programmable egress delay, delay with warning, holding button for the delay, momentary button contact with warning for the delay and even gives alarm when a controlled door is opened.

Locations 90 and 91 are the places for setting the desired functions for the Egress Button.

The functions programmed to the Egress Button do not affect the normal operation of the keypad. The operation of the keypad with Code or Card is always in the first priority to give instant action to the output relay 1 for door strike.

It is **NOT** required to program the Egress Button with the special function in normal use. Just leave it on its default values.

WHERE AND WHY "GOING OUT" NEEDS ATTENTION

Examples for some areas may need an Intelligent Egress Button:

Hospital:

Some of the patients are not allowed to leave the ward without doctor's permission. An egress button with exit delay and warning beeps will help the nurse or warden to get attention to the door when the egress button is pressed. Further setting of the egress button with holding contact delay even gives higher level of security to a controlled door.

Kindergarten:

Young children are always active. Some of them may be willing to go out to explore their ways of playing. For safety reason, teachers have to watch all of them in the attended area. Leaving school alone without the companion of parents or teacher is dangerous to young children. An egress button with delay and warning beeps will be helpful to prevent the children trying to go out without getting the attention of the teacher.

Elderly Home:

The elderly needs constant attention and care. Some old people have poor memory. They may forget the way to come back if they leave home alone. An egress button with delay and warning beep will easily get the attention of the warden before the door is open.

Convenient Store:

Most of the convenient stores have just only one or two shopkeepers on duty. They are usually the cashier. Shoplifting may easily happen while the shopkeeper is busily serving customers at the cashier desk. A holding contact egress button with delay and warning beeps may help to stop most of the shoplifting. As the thief knows that he is gotten attention by the shopkeeper before the door is open.

High Traffic Passage:

A short buffer time may be necessary for opening a door outward after pressing the egress button for those exits open to a high traffic passage. An egress button with short delay and warning beeps helps the user to pay attention to the people passing by to prevent hitting them when the door is pushed outward.

Emergency Exit:

Emergency Exit is not open to the public for daily use. It is for emergency case only. It is usually closed and watched by guards. The egress button of this keypad can be programmed to offer exit delay with warning beeps and even gives alarm output to trigger an alarm system when the door is forced to open or the door is open after the exit delay expired. It is an useful tool to get attention of the person on duty.

WARNING

Do not enable Egress Delay if instant door open for leaving is the main concern in your area.

Make sure the Egress Delay does not affect the safety in your service area before enabling the function in Location 90.

The default setting of the system is NO DELAY.

EGRESS DELAY , WARNING AND ALARM (Location 90)

LOCATION		CONFIGURATIONS		DELAY TIME		VALIDATION
9 0	→	1 – 6	→	0 or 1 – 9 9	→	#
(1)		(2)		(3)		(4)

(1) LOCATION

Key in Location 9 0

(2) CONFIGURATIONS OF THE EGRESS WARNING AND ALARM

Key in the number to enable 1 of the 6 configurations described below:

1 **-– Momentary Contact Mode without Warning – (Default)**
- Press the Button once. No warning or alarm is given during Egress Delay.
- Good for silent area. The people have to wait for the door open until the delay time reaches.

2 **-– Momentary Contact Mode with Warning Beep**
- Press the Button once. The system gives Warning Beeps during the Egress Delay.
- Good for the place required attention. The keypad beeps during the people are waiting for the door open.

3 **-– Momentary Contact Mode with Warning Beep & Alarm**
- Press the Button once. The system gives Warning Beeps and also activates its Alarm O/P during the Egress Delay
- Good for door for the authorized people only. The keypad beeps and report alarm to a security system during the people are waiting for the door open.
- This is usually an "Emergency Exit". The door can be opened with the Keypad without triggering of the Buzzer and Alarm Output.

4 **-– Holding Contact Mode without Warning**
- Press and hold the Button. No warning or alarm is given during the Egress Delay.
- Good for the silent area. The people require to press & hold the button until the delay time reaches for the door open.

5 **-– Holding Contact Mode with Warning Beep**
- Press and hold the Button. The system gives Warning Beeps during Egress Delay.
- Good for the place required attention. The keypad beeps while the button is kept pressed during the people are waiting for the door open.

6 **-– Holding Contact Mode with Warning Beep & Alarm**
- Press and hold the Button. The system gives Warning Beeps and also activates its Alarm O/P during Egress Delay.
- This is usually an "Emergency Exit". The door can be opened with the Keypad without triggering of the Warning and Alarm.

(3) EGRESS DELAY TIMER

0 **-– No Delay – (Default)**

Output 1 activates instantly (the door is released instantly) when the Egress Button is pressed.

1 – 9 9 **-– Egress Delay Timing**

Put a number of 1 to 99 into the box to enable the Egress Delay. The number is the time in second, which starts to count when the Egress Button is pressed. Output 1 activates (the door is released) when the delay time reaches.

NOTE:

1) **Momentary Contact --** The Egress Delay starts to count when the egress button is momentarily pressed. Output 1 activates automatically (door is released) when the delay time reaches.

2) **Holding Contact –** The user **MUST** hold the egress button in contact for the whole period of the Egress Delay time until Output 1 activates. If the egress button is released before the end of the Egress Delay, the timer will stop to count and reset.

   For safety, it is necessary to put **a sticker next to the egress button** telling how to open the door if "Holding Contact" is enabled.
   Example: A sticker for an egress button that is programmed with "Holding Contact" of 5 seconds.

Press & Hold The Button 5 Seconds Minimum Until The Door Is Open

3) The Egress Delay does not affect the operation of the User Codes/Cards for Output 1. The User Codes/Cards always give **INSTANT** action.

(4) VALIDATION

Press [#] key once. Two-beep confirms the entry

EXAMPLES:

Example 1: Set Egress Button in Momentary contact of 5 seconds with delay & warning beep

[9][0]	[2]	[5]	[#]
(a)	(b)	(c)	(d)

(a) Egress function programming, **(b)** Momentary contact with warning, **(c)** Delay time of 5 seconds to release door, (d) Entry confirmation

Example 2: Set Egress Button in Holding contact of 10 seconds with warning beep

[9][0]	[5]	[1][0]	[#]
(a)	(b)	(c)	(d)

(a) Egress function programming, **(b)** Holding contact mode with warning, **(c)** Holding time of 10 seconds to release door, (d) Entry confirmation

Example 3: Set Egress Button in Momentary contact without delay (This is the default setting)

[9][0]	[1]	[0]	[#]
(a)	(b)	(c)	(d)

(a) Egress function programming, **(b)** Momentary contact without delay, **(c)** Release door instantly, **(d)** Entry confirmation

DOOR OPENING ALARM & TIMER (Location 91)

LOCATION		ALARM TIME		VALIDATION
9 1	→	0 or 1 – 9 9 9	→	#
(1)		(2)		(3)

(1) LOCATION

Key in Location 9 1

(2) ALARM & TIMING OF DOOR OPENING

0 –- No Alarm – (Default)

The Alarm Output is disabled

1 – 9 9 9 –- Alarm Timer

The Door Open Alarm operates the Alarm Output (Terminal 20) only. It is mainly prepared to trigger an optional alarm system. Put a Timing Figure of 1 to 999 into the box to enable the function of Door Opening Alarm. The figure is the time in second of the alarm duration, which starts to count after the door is opened and it resets automatically when the time reaches.

The alarm can be stopped with the User Codes/Cards or the Super User Code for Output 1 at any time before the end of the alarm time.

NOTE:

a) The Door Opening Alarm is designed to protect the emergency exit door from use by the un-authorized person. The alarm occurs when the door is opened or forced to open. However, Alarm will not happen if the door is opened with a valid User Code or Card.

b) This function works with a door position sensing switch equipped on the door.

The Manner of The Door Opening Alarm:

a) The door is forced to open without using Code/Card – **Alarm**

b) The door is opened with Egress Button – **Alarm**

c) The door is opened with Code/Card – **No Alarm**

To prevent confusion of the alarm outputs. It is suggested to disable the "Door Forced Open Warning" at Location 80 while "Door Opening Alarm" function is enabled. If both functions at Location 80 and Location 91 are enabled and are set with different timings, the system will combine them and will take the longer one for alarm time.

(3) VALIDATION

Press # key once. Two-beep confirms the entry

PROGRAMMING LOCATIONS FOR SYSTEM EXPANSION

Location 92, 93 and 94 are designed for setting desired modes for Wiegand data output and Split-decoded operation. No setting change is required in these locations for standard application.

WIEGAND DATA OUTPUT MODES (Location 92)

LOCATION		DATA OUTPUT MODES		VALIDATION
9 2	→	1 , 2 , 3 or 4	→	#
(1)		(2)		(3)

(1) LOCATION

Key in Location 9 2

(2) DATA OUTPUT MODES

1 **–- Wiegand Data Output Disabled (Default)**

No Wiegand data output

2 **— Wiegand Data Output Enabled – Mode "A"**

The keypad gives Wiegand data output **ONLY** for those cards and codes that have been registered in memory.

3 **— Wiegand Data Output Enabled – Mode "B"**

The keypad gives Wiegand data output for **ALL** the cards and codes that are read; no matter they are registered or not registered in memory.

a) This mode makes the keypad to work as an independent keypad or as a server of a split-decoded keypad for door lock actuation; and at the same time serves optional controller that utilizes the Wiegand data for different jobs.

b) The keypad discriminates the registered and non-registered cards and codes with different beeps when it sends out the Wiegand data; successful beeps for the registered cards and codes and five beeps for the non-registers.

c) The keypad follows the lock-up setting at Location 60

4 **— Wiegand Data Output Enabled – Mode "C"**

This is the **Reader Mode** of the keypad. It gives Wiegand data output for **ALL** the cards and codes that are read; no matter they are registered or not registered in memory.

a) This mode makes the keypad to work as an independent keypad or as a server of a split-decoded keypad for door lock actuation and at the same time serves optional controller that utilizes Wiegand data for different jobs.

b) The keypad **ALWAYS** gives successful beeps when it sends out the Wiegand data after reading a card or code.

c) The keypad does not follow the lock-up setting at Location 60 and disables it automatically in Mode "C" to make it a reader to un-limitedly accept reading of cards and codes.

(3) VALIDATION

Press # key once. Two-beep confirms the entry

WIEGAND DATA OUTPUT FORMAT (Location 93)

LOCATION		WIEGAND FORMAT		VALIDATION
9 3	→	1 , 2 or 3	→	#
(1)		(2)		(3)

(1) LOCATION

Key in Location 9 3

(2) WIEGAND FORMAT FOR EM CARD & USER CODE

The Wiegand data output is programmable for 26-bit, 34-bit or 37-bit standard format.

1 - 26 - Bit Wiegand Data Output (Default)

Bit 1 : Even Parity Bit (bit 2 – bit 13)
Bit 2 – Bit 25 : 24 Bit ID Number
Bit 26 : Odd Parity Bit (bit 14 – bit 25)

2 - 34 - Bit Wiegand Data Output

Bit 1 : Even Parity Bit (bit 2 – bit 17)
Bit 2 – Bit 33 : 32 Bit ID Number
Bit 34 : Odd Parity Bit (bit 18 – bit 33)

3 - 37 - Bit Wiegand Data Output

Bit 1 : Even Parity Bit (bit 2 – bit 19)
Bit 2 – Bit 36 : 35 Bit ID Number
Bit 37 : Odd Parity Bit (bit 19 – bit 36)

(3) VALIDATION

Press # key once. Two-beep confirms the entry

OPERATION MODES (Location 94)

The keypad is programmable for keypad mode to work stand-alone for door control directly or for server mode to work with a split-decoder for high security access control.

LOCATION		OPERATION MODES		VALIDATION
9 4	→	0 or 1	→	#
(1)		(2)		(3)

(1) LOCATION

Key in Location 9 4

(2) OPERATION MODES

0 – Keypad Mode (Default)

Keypad Mode sets the keypad for stand-alone operation to provide its available functions. It is compatible with the auxiliary readers/keypads for multi-station expansion.

1 – Server Mode

Server Mode sets the keypad to compatible with both the decoder for split-decoded operation and the auxiliary readers/keypads for multi-station expansion. A split decoded keypad system uses the keypad(s) for human interface outside and the internal decoder for door lock control to prevent sabotage.

(3) VALIDATION

Press # key once. Two-beep confirms the entry

CLOSE PROGRAMMING MODE (* *)

Always close programming mode with * * to set system back to normal Operation after programming.

VALIDATION ———————————— System is back to normal operation mode

* *

PROGRAMMING MAKE SIMPLE – For General Users

The keypad has many functions for user's selection. For those general users taking the keypad for door strike only, most of the features can be kept in their Default values. Only the User Codes / Cards and a private Master Code are required to program.

The keypad accepts **1) Card only, 2) Code only, 3) Card + Code or 4) Card + Common User Code** to operate its outputs.

PROGRAMMING

NOTE:

a) The [🔔] button is equivalent to the [*] button in the keypad with bell button.

b) Wait 1 minute until the end of power up delay, or keyin [1][2][#] to stop the power-up delay instantly and set the keypad to normal operation.

1) Set System in Programming Mode with The Factory Set Master Code 0 0 0 0

[0][0][0][0] [*][*] —— 2 beeps, system is in Programming Mode

Note: If the Master Code is forgotten, use the DAP Code to set the system into programming mode. See **DAP CODE 2828 in page 15** for the details.

2) Change The Factory Set Master Code to Owner's Private Master Code for Security Reason

[0][1] [3][2][8][9] [#] —— 2 beeps, 3 2 8 9 is a Master Code for example here only. It replaces the old master code 0000.

3) Record an "EM Card" to Operate The Output 1 for Door Open

[1][0]	[1]	[0][0][1]	READ CARD	[#]
(a)	(b)	(c)	(d)	(e)

(a) 10 = Programming Location for Output 1
(b) 1 = Programming option for EM Card only
(c) 001 = One of the 1,000 User IDs for the User Code/Card from 000-999
(d) Read Card = Put the Card close to the card reader
(e) # = Confirm the card is read, 2 beeps

4) Set an "User Code" to Operate The Output 1 for Door Open

[1][0]	[2]	[0][0][2]	[8][3][2][1]	[#]
(a)	(b)	(c)	(d)	(e)

(a) 10 = Programming Location for Output 1
(b) 2 = Programming option for User Code only
(c) 002 = One of the 1,000 User IDs for the User Code/Card from 000-999
(d) 8321 = The User Code for door open. It is for example here only
(e) # = Confirm the User Code, 2 beeps

5) Record an "EM Card + User Code" to Operate The Output 1 for Door Open

1 0	3	0 0 3	READ CARD	6 1 2 3	#
(a)	(b)	(c)	(d)	(e)	(f)

(a) 10 = Programming Location for Output 1
(b) 3 = Programming option for EM Card + User Code. (The User Code can be repeated use or proprietary)
(c) 003 = One of the 1,000 User IDs for the User Code/Card from 000-999
(d) Read Card = Put the Card close to the card reader
(e) 6123 = The User Code to be used with the EM Card. It is for example here only.
(f) # = Confirm the Card+Code is stored, 2 beeps

6) Record an "EM Card + Commom User Code" to Operate The Output 1 for Door Open

1 0	4	0 0 4	READ CARD	#
(a)	(b)	(c)	(d)	(e)

(a) 10 = Programming Location for Output 1
(b) 4 = Programming option for EM Card + Common User Code
(c) 004 = One of the 1,000 User IDs for the User Code/Card from 000-999
(d) Read Card = Put the Card close to the card reader
(e) # = Confirm the card is read, 2 beeps, the Common User Code goes to this User ID automatically
(f) A Common User Code (for example: 1 3 5 7) **MUST** be set at the Programming **Location 03 first.** Common code can be used for all the EM Cards in this operation mode.

REMARK:
If more User Codes and Cards are required for Output 1, repeat the procedures (3) , (4) , (5) or (6) above with other User IDs, such as 005, 006, 007 -– 999 etc. Total 1,000 users are allowed. See Programming Location 10 for the details.

7) Close The Programming Mode

[*] [*] -— 2 beeps
The programming mode is closed. The keypad is back to normal operation mode

OPERATION

1) Open The Door with EM Card

READ CARD -— 2 beeps, the door is open

2) Open The Door with User Code

8 3 2 1 # -— 2 beeps, the door is open

3) Open The Door with EM CARD + User Code

READ CARD 6 1 2 3 # -— 2 beeps, the door is open

4) Open The Door with EM CARD + Common User Code

READ CARD 1 3 5 7 # -— 2 beeps, the door is open

FACILITIES FOR WIEGAND OUTPUT

System expandable is one of the main features of the DK-2800 series keypads.

The keypad incorporates a wire harness that provides Wiegand data output for working with the optional access controller. The wires 1-4 are the facilities for Wiegand data and wire 5 is the common ground of the keypad and the optional devices in the system. Please see the following descriptions for the details.

THE WIRE HARNESS

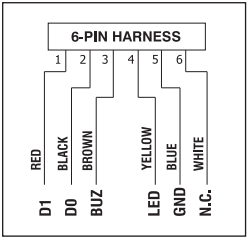

1) D1 (Red) – D1 Wiegand Data Output Port

This output port provides the D1 Wiegand data from reading a card or user code. Connect it to the D1 input port of the controller.

2) D0 (Black) – D0 Wiegand Data Output Port

This output port provides the D0 Wiegand data from reading a card or user code. Connect it to the D0 input port of the controller.

3) BUZ (Brown) – Buzzer Control Input

The internal buzzer of the keypad is 0V (-) activation. It provides the audible feedback indication from the controller. Connect it with the buzzer output port of the controller.

4) LED (Yellow) – LED Lamp Control Input

The internal Green LED is 0V (-) activation. It provides the visual feedback indication from the controller. Connect it with the LED output port of the controller. The LED is located at the left hand side of the keypad.

5) GND (Blue) – (-) Common Ground

It is the common ground of the system. It is designed for connecting with the common ground of the optional equipment working with the keypad.

6) NC (White) – No Connection

An empty wire

The Timing and Electrical Manner of The Wiegand Data Output

Wiegand is a common medium in the communication between readers and controller in access control. The Wiegand data from the keypad unit provides a level of compatibility for readers and controller that can be used by consultants in custom project development.

The Wiegand interface uses three wires, one of which is a **Common Ground** and two of which are data transmission wires called **DATA 0** and **DATA 1**. When no data is being sent both DATA 0 and DATA 1 are at high voltage. When a "0" is sent the DATA 0 is at low voltage while the DATA 1 stays at a high voltage. When a "1" is sent DATA 1 is at the low voltage while DATA 0 stays at the high voltage.

The high voltage level in the keypad unit is +5VDC to accommodate for long cable runs (approximate 500 feet) from it to the associated controller typically located in a secure closet.

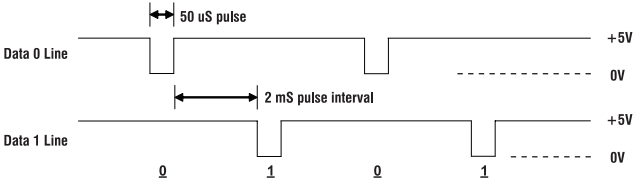

Wiegand Data 26-Bit, 34-Bit or 37-Bit Selection

The Wiegand data output is programmable to 26-bit, 34-bit or 37-bit standard format for EM Cards and user codes on **LOCATION 93**.

1) 26-Bit Wiegand Data Output

Bit 1 : Even Parity Bit (bit 2 – bit 13)
Bit 2 – Bit 25 : 24 Bit ID Number
Bit 26 : Odd Parity Bit (bit 14 – bit 25)

2) 34-Bit Wiegand Data Output

Bit 1 : Even Parity Bit (bit 2 – bit 17)
Bit 2 – Bit 33 : 32 Bit ID Number
Bit 34 : Odd Parity Bit (bit 18 – bit 33)

3) 37-Bit Wiegand Data Output

Bit 1 : Even Parity Bit (bit 2 – bit 19)
Bit 2 – Bit 36 : 35 Bit ID Number
Bit 37 : Odd Parity Bit (bit 19 – bit 36)

26 Bit Wiegand Data From EM Cards

26-bit EM Card is the most popular one on the market. Almost all the controllers can use the 26-bit standard format.

A 26 bit Wiegand protocol for card reading has 1 first parity bit, 24 bits of the Card ID, and 1 stop bit for a total of 26 bits. The first parity bit is an **Even parity** bit calculated from the first 12 bits of the code and the trailing parity bit is an **Odd parity** bit from the last 12 bits. The data output is in **Hex Binary codes.**

Each EM card or Keyfob is marked with an unique ID in Decimal Digits that is the code read by the reader. The EM Card is also marked with a "3 digit + 5 digit" code that are the site code and ID number arrangement of the Wiegand data.

EXAMPLE:

a) The Code Marked on One of The EM Cards:

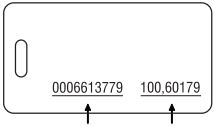

The ID Code to be read for Wiegand Output The Site Code and the ID number

The Code in Decimal Number : 6 6 1 3 7 7 9
The Code 6 6 1 3 7 7 9 Equivalent to Hex Number : 6 4 E B 1 3

b) Each Hex Number Consists of 4 Bits, Total 26 Bits of Wiegand Data Output from Card Reading:

E 6 4 E B 1 3 **O**

An **E**ven Parity Bit of **6 4 E = 0** An **O**dd Parity Bit of **B 1 3 = 1**

c) The 26 bits Wiegand Data Sending Out in Hex Binary from Reading The Card:

0 0110 0100 1110 1011 0001 0011 1

d) The Arrangement of The Site Code and ID Number of A 26-bit EM Card:

- Site Code: Bit 2 ~ 9 (000~255)
- ID Number: Bit 10 ~ 25 (00000 ~ 65,535)

Wiegand Data Output From User Codes

Wiegand data is also a common media between keypad unit and control panel for the user codes in an access control system. This reader-keypad accepts user codes up to 8 digits for generating Wiegand data. Some precautions are required in taking user code to generate Wiegand data.

Precaution 1

A 26-bit Wiegand data is composed of 2 parity bits and 24 data bits. It is necessary to limit the 8-digit user codes to below 16,777,215 (=FFFFFF) to prevent the data over 24-bit and causing error.

The Wiegand data in 34-bit or 37-bit covers the 8-digit user codes in full value (up to 99,999,999) without error.

Precaution 2

The HEX code of Wiegand data is derived from the user code. Do **NOT** make an user code starting with "0", such as 02345. Otherwise it will cause confusion in Hex code with the user code in same number without "0" at the front. Please see examples B & C below for the explanations. This precaution applies to 26-bit, 34-bit and 37-bit Wiegand data.

Example A shows a 34-bit Wiegand data derived from an 8-digit User Code 12345678.

Example B and C show the Wiegand outputs derived from User Codes 1234 and 00001234. Their Hex binary codes derive from the two User Codes in Wiegand format are identical and can not be discriminated from each other.

EXAMPLE:

A) The keyed-in Code is 1 2 3 4 5 6 7 8

The Code in Decimal Number : 1 2 3 4 5 6 7 8

The Code 1 2 3 4 5 6 7 8 Equivalent to Hex Number : B C 6 1 4 E

E 0 0 B C 6 1 4 E O

An **E**ven Parity Bit of **0 0 B C = 1** An **O**dd Parity Bit of **6 1 4 E = 0**

The 34 bits Wiegand data sending out in Binary from entry of the Code:

1 0000 0000 1011 1100 0110 0001 0100 1110 0

B) The keyed-in Code is 1 2 3 4

The Code in Decimal Number : 1 2 3 4

The Code 1 2 3 4 Equivalent to Hex Number : 4 D 2

E 0 0 0 0 0 4 D 2 O

An **E**ven Parity Bit of **0 0 0 0 = 0** An **O**dd Parity Bit of **0 4 D 2 = 0**

The 34 bits Wiegand data sending out in Binary from entry of the Code:

0 0 0 0 0 0 0 0 0 0 0 0 0 0 0 0 0 0 0 0 0 1 0 0 1 1 0 1 0 0 1 0 0

C) The keyed-in Code is 0 0 0 0 1 2 3 4

The Code in Decimal Number : 0 0 0 0 1 2 3 4

The Code 0 0 0 0 1 2 3 4 Equivalent to Hex Number : 4 D 2

E 0 0 0 0 0 4 D 2 O

An **E**ven Parity Bit of **0 0 0 0 = 0** An **O**dd Parity Bit of **0 4 D 2 = 0**

The 34 bits Wiegand data sending out in Binary from entry of the Code:

0 0 0 0 0 0 0 0 0 0 0 0 0 0 0 0 0 0 0 0 0 1 0 0 1 1 0 1 0 0 1 0 0

PROGRAMMING SUMMARY CHART

LOCATION	FUNCTION	ENTRY LIMITS & CODE OPTIONS	CODE ENTRY	FACTORY DEFAULT
0 1	Master Code	4-8 Digits	0 1 MASTER CODE #	NIL
0 2	Super User Code	4-8 Digits	0 2 SUPER USER CODE #	NIL
0 3	Common User Code for O/P 1	4-8 Digits	0 3 COMMON USER CODE 1 #	NIL
0 4	Common User Code for O/P 2		0 4 COMMON USER CODE 2 #	NIL
0 5	Common User Code for O/P 3		0 5 COMMON USER CODE 3 #	NIL
1 0	User Codes / Cards for O/P 1	**CODE 1 – MEDIA:** 1—-EM Card 2—-Private User Code 3—-EM Card+Sec User Code 4—-EM Card+Com User Code 5—-Deletion of User Code **CODE 2 – USER ID:** 000-999-—Group 1(10) 001-100-—Group 2(20) 001-100-—Group 3(30) **CODE 3 – USER CODES** / Cards: 4-8 Digits / Cards	1 0 CODE1 CODE2 CODE3 #	NIL
2 0	User Codes / Cards for O/P 2		2 0 CODE1 CODE2 CODE3 #	NIL
3 0	User Codes / Cards for O/P 3		3 0 CODE1 CODE2 CODE3 #	NIL
4 0	Visitor Codes	**CODE 1 – VISITOR ID:** 01-50 **CODE 2 – VALID PERIOD:** 00—One Time 01-99 Hours **CODE 3 – VISITOR CODE:** 4-8 Digits	4 0 CODE1 CODE2 CODE3 #	NIL
4 1	Duress Code for O/P 1	**CODE ID – O/P 1:** 01-50 **CODE ID – O/P 2:** 01-10 **CODE ID – O/P 3:** 01-10 **DURESS CODE:** 4-8 Digits	4 1 CODE ID DURESS CODE #	NIL
4 2	Duress Code for O/P 2		4 2 CODE ID DURESS CODE #	NIL
4 3	Duress Code for O/P 3		4 3 CODE ID DURESS CODE #	NIL
5 1	O/P Mode for O/P 1	**OUTPUT MODE & TIME:** 0—- Start / Stop 1—-99999 Seconds, Momentary	5 1 O/P MODE & TIME #	5 Seconds
5 2	O/P Mode for O/P 2		5 2 O/P MODE & TIME #	5 Seconds
5 3	O/P Mode for O/P 3		5 3 O/P MODE & TIME #	5 Seconds
5 5	Real-Time-Clock	**CURRENT REAL TIME:** 00:00-23:59	5 5 CURRENT TIME #	NIL
5 6	Start & Stop Times for Inhibition	**START TIME:** 00:00-23:59 **STOP TIME:** 00:00-23:59	5 6 START TIME STOP TIME #	NIL
6 0	Personal Safety & Lock-Up	**LOCK-UP CODE:** 1—-10 Trial, Lock-Up 60 Sec. 2—-10 Trial, Activates Duress 5-10—-5-10 Trial, Lock-Up 15 Minutes 00—No Lock-Up	6 0 LOCK-UP CODE #	Code = 1, 10 Trials, Lock-Up 60 Seconds
7 0	Code Entry Mode	**ENTRY MODE:** 1—-Auto Mode 2—-Manual Mode	7 0 ENTRY MODE #	Mode = 2, Manual Mode

7 1	Pacifier Tone ON-OFF	**FUNCTION MODE:** 0—OFF 1—ON	7 1 FUNCTION MODE #	Mode = 1, Pacifier Tone ON
7 2	Output Announcer	**FUNCTION MODE:** 0—NO Notification 1—1 Second Long Beep 2—2 Short Beeps	7 2 FUNCTION MODE #	Mode = 1 1 Second Long Beep
7 3	Standby LED Flashing	**FUNCTION MODE:** 0—OFF 1—ON	7 3 FUNCTION MODE #	Mode = 1, Flashing ON
8 0	Door Forced Open Warning & Time	**FUNCTION MODE / TIME:** 0—OFF 1-999 Seconds	8 0 FUNCTION / TIME #	Mode = 0, Door Forced Open Warning OFF
8 1	Propped-up Warning & Time		8 1 FUNCTION / TIME #	Mode = 0, Propped-up Warning OFF
9 0	Egress Delay Warning & Alarm	**CODE 1 – FUNCTION MODE:** 1—Momentary, No warning 2—Momentary, with warning 3—Momentary, with warning + Alarm 4—Hold Contact, No warning 5—Hold Contact, with warning 6—Hold Contact, with warning + Alarm **CODE 2 — DELAY TIME:** 0—No Delay 1-99 Seconds	9 0 CODE 1 CODE 2 #	Mode = 1 Momentary, No warning TIME = 0 No Delay
9 1	Door Opening Alarm & TIMER	**ALARM TIME:** 0—No Alarm 1-999 Seconds	9 1 ALARM TIME #	Time = 0, No Alarm
9 2	Wiegand Data Output Mode	**DATA OUTPUT MODE** 1 — Wiegand Data Output Disabled 2 — Wiegand & Data Output Enabled — Mode "A" 3 — Wiegand Data Output Enabled – Mode "B" 4 — Wiegand Data Output Enabled – Mode "C"	9 2 DATA OUTPUT MODE #	Mode = 1 Disabled
9 3	Wiegand Format	**WIEGAND FORMAT** 1 — 26-Bit Wiegand Data 2 — 34-Bit Wiegand Data 3 — 37-Bit Wiegand Data	9 3 WIEGAND FORMAT #	Format = 1 26-Bit
9 4	Operation Mode	**FUNCTION MODE:** 0—Keypad Mode 1—Server Mode	9 4 MODE #	Mode = 0 Keypad Mode

SYSTEM CODES	FUNCTION	CODE ENTRY	RESULTS
0 0 0 0	Factory Set Master Code for User to set system in programming Mode at the first time. THIS IS NOT A PERMANENT SYSTEM CODE & IT IS CHANGED IF A NEW MASTER CODE IS PROGRAMMED.	0 0 0 0 * * OR NEW MASTER CODE * *	System in Programming Mode
9 9 9 9	**REFRESH CODE –** Refresh the system and set all its function back to default values.	9 9 9 9 #	All programmed data are cleared and back to the default values except the Master Code
2 8 2 8	**DAP CODE–** Direct access to programming mode. Valid only in the power-up delay period	2 8 2 8 #	System in Programming Mode
0 9 9 9	USER Codes / Cards whole group clearing Code for the selected Location **LOCATIONS:** 10--- User Group 1 20--- User Group 2 30--- User Group 3 40--- Vistor Group 41--- Duress Group 1 42--- Duress Group 2 43--- Duress Group 3	LOCATION NO. 0 9 9 9 #	Whole group of users in the selected location are cleared
* *	Exit Programming Code	* *	The system back to normal opration after programming

APPLICATION EXAMPLES

1) STAND ALONE DOOR LOCK

DK-2862/DK-2866

ELECTRIC LOCK

NOTE:

- Connect the 1N4004 as close as possible to the lock in parallel with the lock power terminals of the lock to absorb the back EMF to prevent it from damaging the keypad.
- To avoid Electro-Static-Discharge from interfering with the operation of the keypad, always ground the (-) terminal of the keypad to earth.
- Always connect **DOOR SENSOR** terminal to (-) ground if not used.

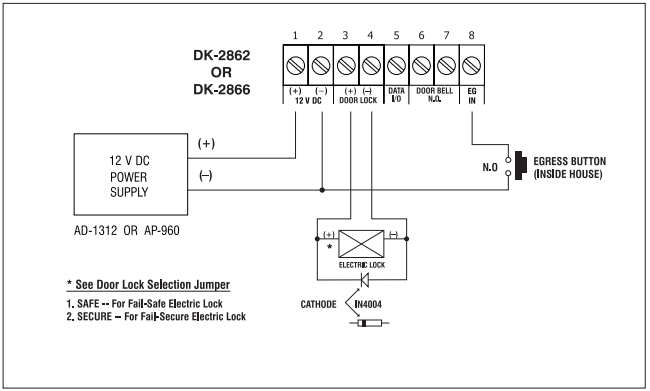

2) INTER-LOCK SYSTEM USING TWO KEYPADS

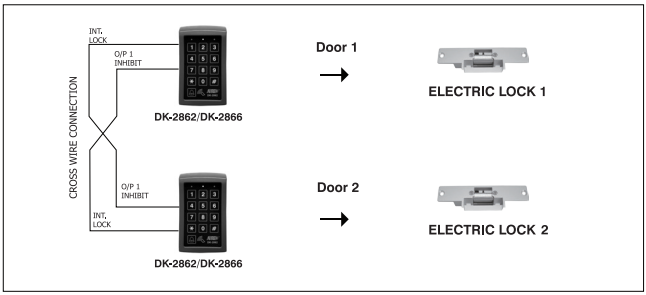

An inter-lock system needs two door controllers. This application example uses two keypads with simple cross wire connection on their "Output 1 Inhibit" and "Inter-lock Control Output" terminals. It is necessary to link up the "(-) GND" terminals of the two keypads as common ground to achieve the inter-lock logical functions.

- Use keypad to open the door from outside
- Press egress button to open the door from inside
- Connect the door magnetic sensors on the doors to monitor their positions
- While door 1 is open, then, door 2 is forced to keep close, or vice versa
- Use N.O. Relay output for fail-secure lock; and N.C. output for fail-safe lock
- Please also see the "NOTE" stated in the Application Example (1)

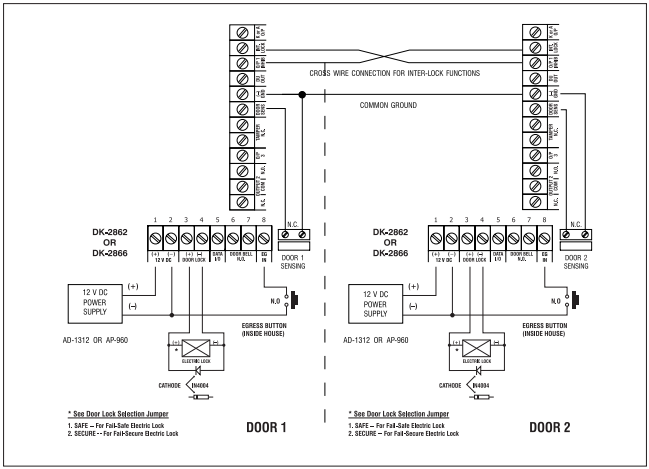

APPLICATION EXPANSIONS

Apart from standard-alone operation, the master keypad is expandable to be a Multi-station System or a High Security Multi-station Split-decoded System with its Data I/O Bus for the connection of the optional auxiliary keypad(s) and decoder. The wiring is very simple. Just connect all the related devices in parallel with the Data I/O Bus. The master keypad is the server that manages the data among them.

A Multi-station System provides higher security in access control and user convenience to operate an electric lock at different locations. Such as a dual keypad system for area needs controlling of going in and going out with user codes or EM cards.

A Split-decoded keypad system increases the overall security with keypad(s) installing outside and decoder installing inside. It prevents the door can be opened due to sabotage at the external keypad(s). A Split-decoded system is also compatible with the auxiliary keypads for multi-station operation. It is a perfect system for overall higher security and user convenience.

The application examples here show the connections of the auxiliary keypads and the decoder to the server keypad. Please contact your local agent for these optional devices if increasing security and user convenience to the system is required.

The auxiliary reader / keypads and the decoders are compatible with all the 2nd generation keypads in the DK-2800 series.

The version"A" auxiliary reader keypads are available, which provide Wiegand and RS-232 data outputs.

The Axiliary Readers & Keypad (Optional)

AR-2802	AR-2806	AR-2807	AR-2809
Aux. Reader	Aux. Reader-Keypad	Aux. Reader-Keypad	Aux. Reader-Keypad

Connection Terminal

AR-2802 and AR-2807	AR-2806	AR-2809
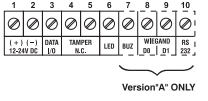	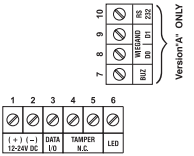	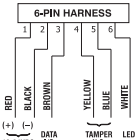

The Split-decoders (Optional)

DA-2800	DA-2801
Decoder with RF Remote Control	**Standard Decoder**

Connection Terminal

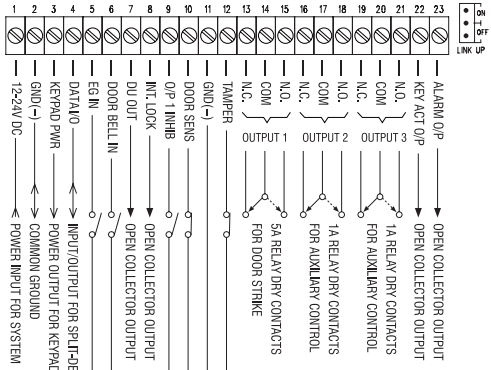

1) Dual-station Access Control Door Lock

Description

Owner can select an auxiliary reader AR-2802 or an auxiliary reader-keypad AR-2806, AR-2807 or AR-2809 and connect it with the master keypad to expand the system with dual-station for user convenience. Simply connect the reader or the reader-keypad in parallel with the Data I/O Bus of the master keypad. The auxiliary reader accepts all the cards that are programmed in the master keypad. If it is an auxiliary reader-keypad it accepts cards and user codes like the master keypad.

Note: Keep **Operation Mode** setting of the keypad in "**Keypad Mode (default)**" with **Location 94 = 0** in this application.

System Connection

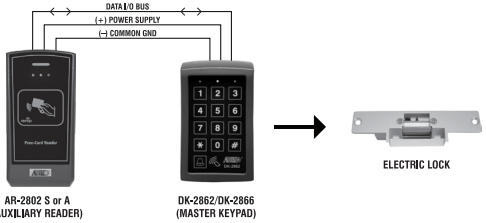

Wiring Diagram

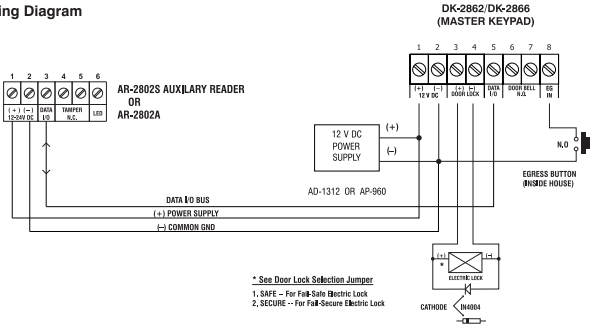

Dual-Station Access Control Door Lock

2) Multi-station Access Control Door Lock

Description

This is an expansion of application (1). The master keypad is expandable to a multi-station system for user convenience with the auxiliary readers AR-2802 and/or the auxiliary reader-keypads AR-2806, AR-2807 &r AR-2809. Total 3 auxiliary readers or reader-keypads can be connected in parallel with the Data I/O Bus and they provide the same functions like the master keypad in using cards and user codes.

Note: Keep **Operation Mode** setting of the keypad in "**Keypad Mode (default)**" with **Location 94= 0** in this application.

System Connection

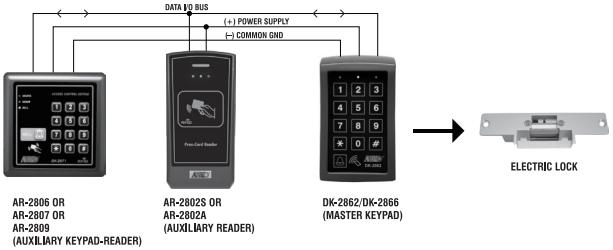

Wiring Diagram

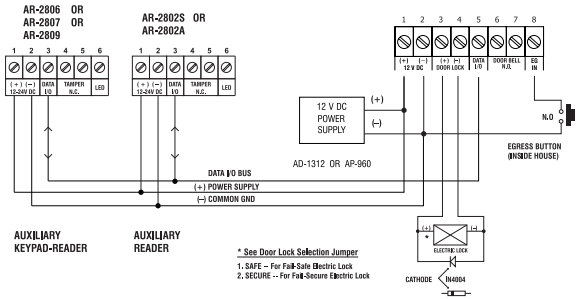

3) Split-decoded Access Control Door Lock

Description

Apart from stand-alone operation, the keypad can be up-graded to high security Split-decoded operation with a decoder unit DA-2800 or DA-2801. The decoder is inside the house with all the input and output installations connecting to it. The keypad manages the data in the system with its Data I/O Bus. The decoder operates the door lock and the appliances directly according to the commands from the keypad unit. This approach prevents the electric door lock or appliance be operated due to sabotage at the external keypad.

Note: Make **Operation Mode** setting of the keypad in "**Server Mode**" with **Location 94 = 1** in this application.

System Connection

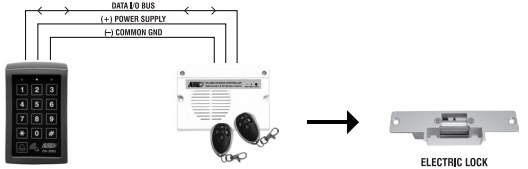

Wiring Diagram

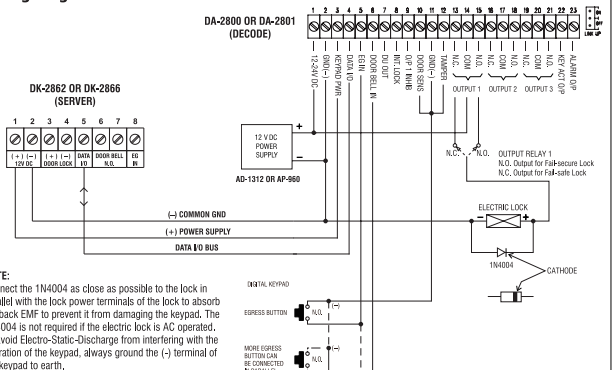

NOTE:

- Connect the 1N4004 as close as possible to the lock in parallel with the lock power terminals of the lock to absorb the back EMF to prevent it from damaging the keypad. The 1N4004 is not required if the electric lock is AC operated.
- To avoid Electro-Static-Discharge from interfering with the operation of the keypad, always ground the (-) terminal of the keypad to earth.
- Always connect DOOR SENSOR terminal to (-) ground if not used.
- Always connect TAMPER terminal to (-) ground if not used.
- Make 3-wire Connection (+, -, DATA I/O) to the keypad in the DK-2800 series.

4) Split-decoded Multi-station Access Control Door Lock

Description

This is an expansion of application (3). The keypad is also expandable to a multi-station system in Split-decoded operation. It is compatible with the auxiliary readers AR-2802 and the auxiliary reader-keypads AR-2806, AR-2807 & AR-2809. Total 3 auxiliary readers or reader-keypads can be connected in parallel with the Data I/O Bus. They provide the same functions like the master keypad in using cards and user codes. The keypad that is the server of the system manages the data with its Data I/O Bus among the associated devices. This approach gives high security in sabotage prevention and user convenience.

Note: Make **Operation Mode** setting of the keypad in "**Server Mode**" with **Location 94 = 1** in this application.

System Connection

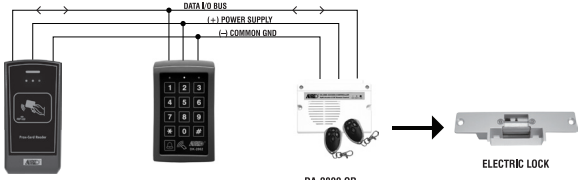

Wiring Diagram

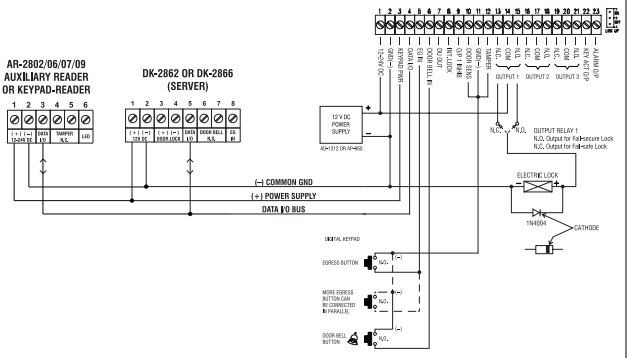

APPLICATION HINTS FOR THE AUXILIARY TERMINALS

(A) TAMPER N.C.

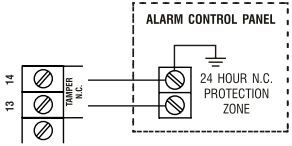

The tamper switch is Normally Closed while the keypad is secured on gang box. It is open when the keypad is removed from the gang box. To prevent sabotage, connect these terminals in series with a 24 hour N.C. protection zone of an alarm system if required.

(B) DOOR SENS

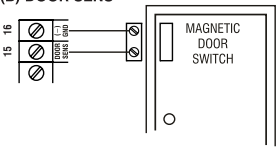

With the help of a Normally Closed door position sensor (usually a magnetic door switch) on the door to set up the following functions:

a) **Door Auto Relock --** The system will immediately relock the door after a valid access has been gained to prevent "tailgate" entries.

b) **Door Forced-open Alarm --** The keypad will generate alarm instantly if the door is forced to open. Enable the function at Location 80.

c) **Door Propped-up Alarm --** The keypad will generate alarm if the door is left open longer than the pre-set delay time. Enable the function at Location 81.

d) **Inter-lock Control --** When the door is open,the interlock output of the keypad will give a (–) command to stop the other keypad in an inter-lock system.

e) **Door Opening Alarm --** Door Opening Alarm is designed for the emergency door only. It is always given when the door is opened unless a valid user code or card is used prior to the door is opened. Enable the function at Location 91.

(C) ALARM OUTPUT – SET THE "K OR A" JUMPER TO "A"

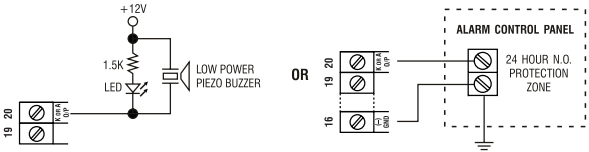

The Alarm Output switches to (–) ground in door forced to open or the door open after Egress Delay. You may use it to turn ON an LED lamp and/ or a small buzzer to notify a guard; or connect it to a 24 hour Normally Open protection zone of an alarm system. See Location 80 and Location 91 for more information about these functions.

- Only one connection option is recommended. Make sure that the sink current does not exceed the maximum rating of 100mA.

(D) KEY ACTIVE – SET THE "K OR A" JUMPER TO "K"

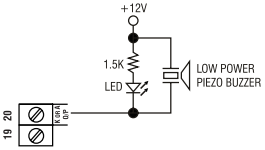

(a)

OR

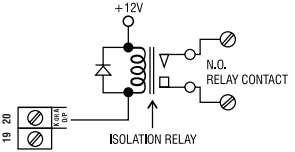

(b)

The Key Active Output switches to (-) ground for 10 seconds whenever a key is touched. You may use it to turn ON an LED lamp and /or a small buzzer to notify a guard; or to energize a relay to switch ON lights or trigger an CCTV Camera to start recording.

- Make sure that the relay for switching ON lights has high enough isolation between high voltage and low voltage to prevent damage of the keypad.
- Only one connection option is recommended. Make sure the sink current does not exceed the maximum rating of 100mA.
- External power supply and isolation relay are strictly necessary in driving high power device, such as lights.

(E) DURESS OUTPUT

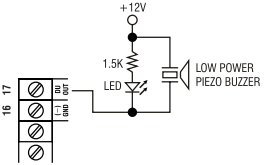

OR

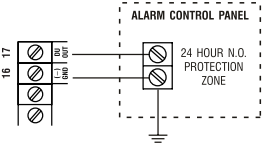

The Duress Output switches to (–) ground when duress code is entered. You may use it to turn ON an LED lamp and/ or a small buzzer to notify a guard; or connect it to a 24 hour Normally Open protection zone of an alarm system.

- Only one connection option is recommended. Make sure that the sink current does not exceed the maximum rating of 100mA.

(F) OUTPUT 2

(i) Shunting an N.C. Zone

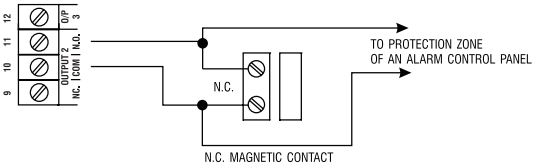

- Use the Normally Open (N.O.) output contact to shunt a Normally Closed (N.C.) protection zone of an alarm system.
- Set output contact to Start / Stop Mode (Programming Option 52, Output Mode=0).

(ii) Alarm System Arm-Disarm Control

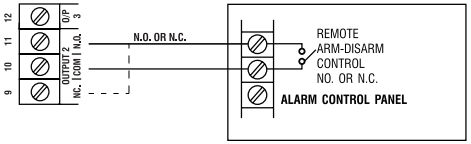

- Use the (N.O.) or (N.C.) output contact to make arm-disarm control of an alarm system.
- Consult your alarm control panel manual for the appropriate output contact for arm-disarm control. Usually set output 2 to Momentary mode (Programming Option 521, Location 52, Output Mode=1) for
- multi station systems and Start / Stop mode (Programming Option 520, Location 52, Output Mode=0) for single station systems.

AUXILIARY INFORMATION

- **DRY CONTACT**
  A dry contact means that no electricity is connected to it. It is prepared for free connections. The Relay Output contacts provided in this keypad system are dry contacts.

- **N.C.**
  Normally Closed, the contact is closed circuit at normal status. It is open circuit when active.

- **N.O.**
  Normally Open, the contact is open circuit at normal status. It is closed circuit when active.

- **TRANSISTOR OPEN COLLECTOR OUTPUT**
  An open collector output is equivalent to a Normally Open (N.O.) contact referring to ground similar to a relay contact referring to ground. The transistor is normally OFF, and its output switches to ground (-) when active. The open collector can only provide switching function for small power but it is usually good enough for controlling of an alarm system. The Duress, Inter-lock and Key Active/Alarm Outputs of the keypad are open collector outputs.

OPEN COLLECTOR OUTPUT ----
Output switches to ground when activated

EQUIVALENT

N.O. CONTACT OUTPUT ----
Output switches to ground when activated

RED Declaration of Conformity
Hereby, Velleman NV declares that the radio equipment type [HAA2866N] is in compliance with Directive 2014/53/EU.
The full text of the EU declaration of conformity is available at the following internet address: www.velleman.eu.

Velleman® Service and Quality Warranty

Since its foundation in 1972, Velleman® acquired extensive experience in the electronics world and currently distributes its products in over 85 countries.

All our products fulfil strict quality requirements and legal stipulations in the EU. In order to ensure the quality, our products regularly go through an extra quality check, both by an internal quality department and by specialized external organisations. If, all precautionary measures notwithstanding, problems should occur, please make appeal to our warranty (see guarantee conditions).

General Warranty Conditions Concerning Consumer Products (for EU):

• All consumer products are subject to a 24-month warranty on production flaws and defective material as from the original date of purchase.

• Velleman® can decide to replace an article with an equivalent article, or to refund the retail value totally or partially when the complaint is valid and a free repair or replacement of the article is impossible, or if the expenses are out of proportion.

You will be delivered a replacing article or a refund at the value of 100% of the purchase price in case of a flaw occurred in the first year after the date of purchase and delivery, or a replacing article at 50% of the purchase price or a refund at the value of 50% of the retail value in case of a flaw occurred in the second year after the date of purchase and delivery.

• **Not covered by warranty:**

- all direct or indirect damage caused after delivery to the article (e.g. by oxidation, shocks, falls, dust, dirt, humidity...), and by the article, as well as its contents (e.g. data loss), compensation for loss of profits;

- consumable goods, parts or accessories that are subject to an aging process during normal use, such as batteries (rechargeable, non-rechargeable, built-in or replaceable), lamps, rubber parts, drive belts... (unlimited list);

- flaws resulting from fire, water damage, lightning, accident, natural disaster, etc....;

- flaws caused deliberately, negligently or resulting from improper handling, negligent maintenance, abusive use or use contrary to the manufacturer's instructions;

- damage caused by a commercial, professional or collective use of the article (the warranty validity will be reduced to six (6) months when the article is used professionally);

- damage resulting from an inappropriate packing and shipping of the article;

- all damage caused by modification, repair or alteration performed by a third party without written permission by Velleman®.

• Articles to be repaired must be delivered to your Velleman® dealer, solidly packed (preferably in the original packaging), and be completed with the original receipt of purchase and a clear flaw description.

• Hint: In order to save on cost and time, please reread the manual and check if the flaw is caused by obvious causes prior to presenting the article for repair. Note that returning a non-defective article can also involve handling costs.

• Repairs occurring after warranty expiration are subject to shipping costs.

• The above conditions are without prejudice to all commercial warranties.

The above enumeration is subject to modification according to the article (see article's manual).

Made in PRC
Imported by Velleman nv
Legen Heirweg 33, 9890 Gavere, Belgium
www.velleman.eu