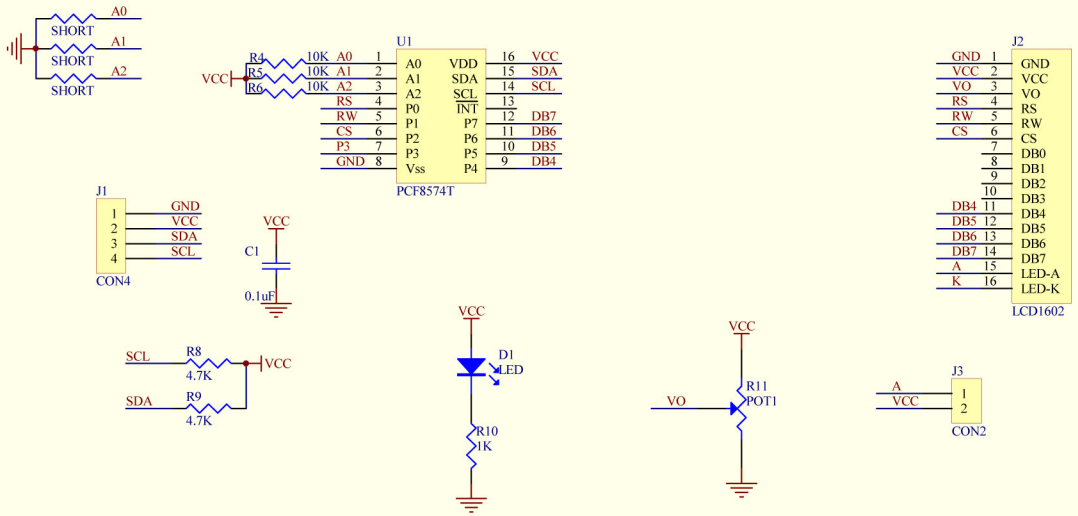


# IIC Module

| Title | | |
|---|---|---|
| Size A4 | Number | Revision |
| Date: 1-May-2013 | Sheet of | |
| File: D:\原理图\I2CLCD1602\I2CLCD1602\I2CLCD1602.ddb | Drawn By: | |